FRINDEL OPTICS

The respective functions of galvanized and fire-resistant cable trays

The respective functions of galvanized and fire-resistant cable trays

Cable Trays and Fire Protection Systems: Keeping

We talked about what cable trays do for fire safety, what fire systems need from trays, showed a real example, and gave important tips. This helps us

Contact Us

Fire-Resistant Cables: Principles and Types You Should

Fire-resistant cables are designed to maintain their performance and function during and after exposure to fire, ensuring the continued operation of essential systems

Contact Us

Fire Resistant Cables: Types, Differences, and Applications , Fast Cables

At Fast Cables, we manufacture cables that comply with international safety standards, ensuring protection for lives, property, and equipment. This article covers the basics of fire-resistant cables,

Contact Us

Flame retardant vs fire resistant cables - what's the

A good, flame retardant material will be able to sit in a flame without catching fire, and if the flame is of sufficient intensity that the insulation or sheath does catch

Contact Us

Cable Trays and Fire Protection Systems: Keeping

Learn how Cable Trays and Fire Protection Systems work together. They protect cables and help fire alarms, sprinklers, and emergency systems

Contact Us

Flame Retardant Vs Fire Resistant Cables Explained

Flame retardant cables slow the spread of fire, while fire resistant cables keep working during a fire to power vital emergency systems. This difference matters most in critical situations. Flame retardant

Contact Us

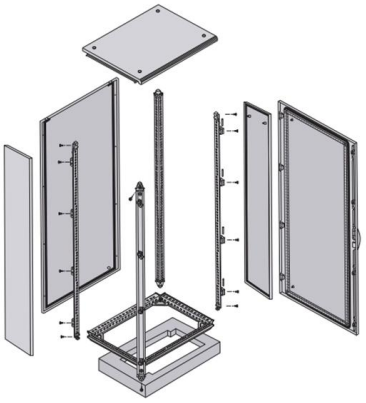

The Last Cable Standing FIRE RESISTANT CABLES

The Last Cable Standing CABLES VS FIRE Fires have a high cost in terms of loss of human life and damages to plants and structures.

Contact Us

Applications of Fire-Resistant Cables and

Why They Matter

If you want to understand the difference between fire-resistant cables and flame-retardant cables, please refer to our explanation on flame-retardant vs

Contact Us

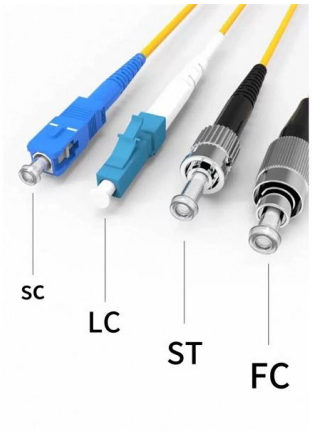

What is fire-resistant cable? Structure, classification and

Discover the structure, classification and applications of fire-resistant cables - an effective solution preventing electrical short circuits and fires in buildings.

Contact Us

Difference between Flame Resistant and Flame

Flame-retardant cables are made from a material which has been chemically treated to self-extinguish in the fire. Flame retardant and flame

Contact Us

Role of fire-resistant cables in critical firefighting systems: a

Understanding life-safety and firefighting 'wiring systems' is essential, and several countries have now upgraded the testing of

Contact Us

Difference between Flame Retardant and Fire Resistant

Flame retardant prevents the spread of fire, while fire resistant keeps the electricity running in fire or emergency conditions. Wilson Cables 's superior

Contact Us

Choosing Between Flame Retardant and Fire Resistant Cables for

Flame retardant cables serve as a vital component in fire safety strategies, designed to inhibit or delay the spread of flames in the event of a fire. These cables are crafted from materials specifically

Contact Us

Choosing Between Flame Retardant and Fire Resistant

Cable trays, conduits, and supports should be installed according to industry standards to prevent stress on the cables, which could compromise their

Contact Us

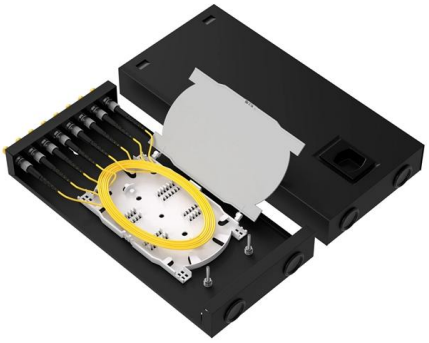

Cable Tray Technical Guide A practical guide to product selection and

Cable Tray Technical Guide A practical guide to product selection and installation This guide for engineers and installers has been developed by ABB as a practical reference regarding cable tray

Contact Us

Flame-Retardant Cables vs. Fire-Resistant Cables: The

Core Difference Comparison Understanding the distinction between flame-retardant and fire-resistant cables is essential for choosing the correct type

Contact Us

Fire Rated Cable Tray, Heavy-Duty Cable Tray Manufacturer

We provide a variety of options that include different materials and finishes, such as powder-coated aluminum, galvanized steel, and fiberglass with intumescent coatings, all designed to improve fire

Contact Us

Flame Retardant Cable vs. Fire Resistant Cable:What's

Fire-resistant cables have been tested and certified to meet certain standards, whereas flame retardant cable has been designed to resist or slow the

Contact Us

Flame Retardant Cable vs Fire Resistant Cable

Flame Retardant Cable vs Fire Resistant Cable Table of Contents When it comes to fire safety in cables, understanding the differences between

Contact Us

Technical Guidelines for Cable Tray Installation and

Cable tray installation must comply with specific technical standards to ensure electrical safety, system reliability, and long-term maintainability. This document

Contact Us

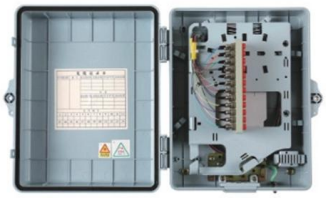

datasheet-645-steel-wire-armoured-fire-resistant-cable

STEEL WIRE ARMOURED FIRE RESISTANT CABLE ELECTRICAL & MECHANICAL CHARACTERISTICS PHYSICAL INFORMATION ORDERING INFORMATION

Contact Us

What are the Functions and Uses of Fire-resistant Cables?

The cost of flame retardant cables is low, and most of the fire-resistant cables are used. The advantage of fire-resistant cables is that they can ensure the

Contact Us

Understanding Fire-Resistant Cables: Importance,

Learn the difference between fire-resistant and flame-retardant cables, explore key standards like BS 6387, IEC 60331, and understand applications in

Contact Us

Fire protection for cables & cable trays , Flamro

In addition to fire protection, these solutions enhance the resistance of cables to environmental influences, such as UV radiation, salt water, oil, and other chemicals.

Contact Us

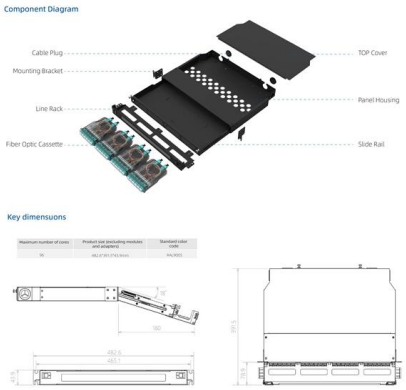

Fire-Resistant vs Flame-Retardant Cables: What's the

While both fire-resistant and flame-retardant cables enhance fire safety, their functions are not the same. Flame-retardant cables prevent the spread of fire,

Contact Us

Flame-Retardant vs Fire-Resistant Cables , Differences, Standards

Flame-retardant cables and fire-resistant cables serve different purposes in fire safety systems. This article explains their definitions, working principles, standards, key differences, and

Contact Us

Principle and Application Analysis of Fire-Rated Electrical Cables

Through material innovation and structural optimization, fire-rated electrical cables achieve the "lifeline" function in fire environments. With technological advancements, their performance will be further

Contact Us

Flame Retardant vs Fire Resistant Cables: A

Complete Buyer's Guide

Choosing the right cable type is crucial for any engineering project. Many purchasers and engineers confuse "flame

Contact Us

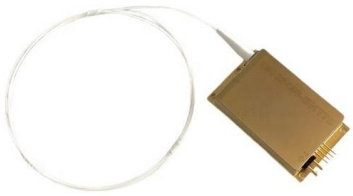

Fire Resistant Cables: Types, Differences, and Applications

At Fast Cables, we manufacture cables that comply with international safety standards, ensuring protection for lives, property, and equipment. This article

Contact Us

Contact Us

For datasheets, pricing, or custom fiber access solutions, please visit: https://www.frindel.es