FRINDEL OPTICS

Serbian micro-module manufacturer

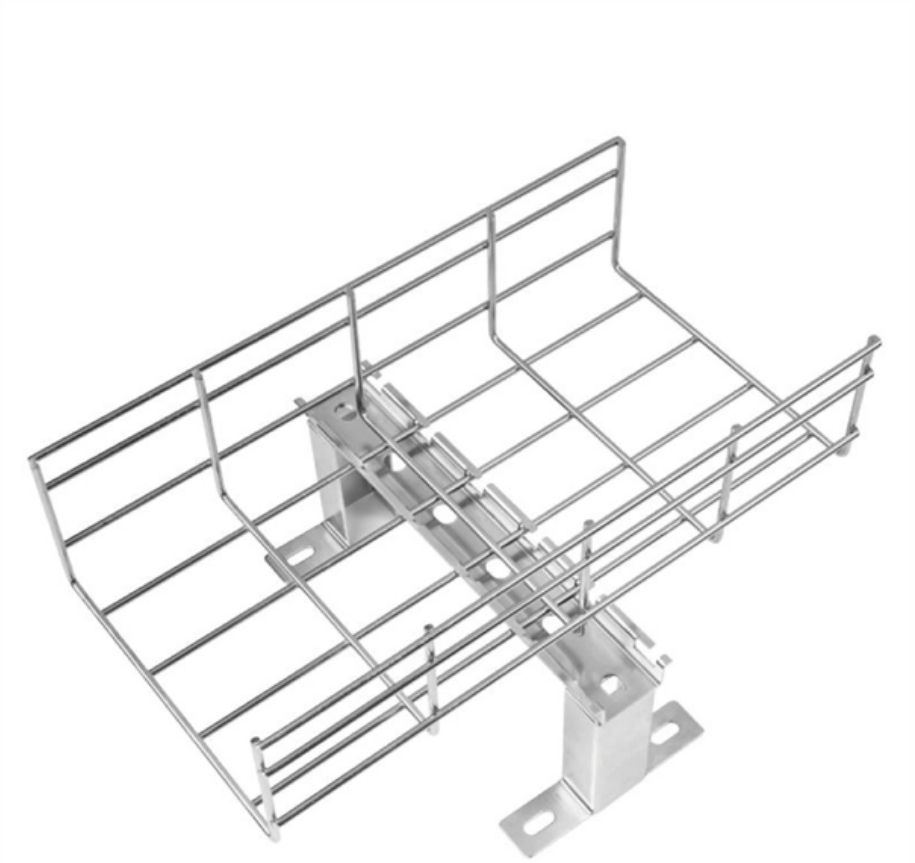

Overview

MikroElektronika (known by its abbreviation MIKROE) is a Serbian manufacturer and retailer of hardware and software tools for developing embedded systems. using your contact details to keep you informed by email about its other products, services and content that may be of interest to you. RT-RK is a prominent embedded software development house in Southeast Europe, with a significant focus on the consumer electronics sector, which has expanded due to the growth of the semiconductor industry. Find detailed information on Semiconductor and Other Electronic Component Manufacturing companies in Serbia, including financial statements, sales and marketing contacts, top competitors, and firmographic insights. IGBT modules, power diodes, Schottky diodes, thyristors, rectifier bridges, integrated circuits.

Serbian micro-module manufacturer

Serbian Modul Manufacturers , Suppliers of Serbian Modul (US Import

Serbian manufacturers and suppliers of modul from around the world. Panjiva uses over 30 international data sources to help you find qualified vendors of Serbian modul.

Contact Us

DRAM modules , Micron Technology Inc.

Discover Micron's high-performance, reliable DRAM modules for versatile memory solutions across computing and enterprise applications.

Contact Us

Serbien Hersteller Fabrikant elektronische Module

Serbien: Durchsuchen Sie die 10 Hersteller Fabrikant in der elektronische Module Branche auf Europages, die Plattform für internationales B2B-Sourcing.

Contact Us

Top 6 Semiconductor Companies in Serbia (2026) , ensun

Discover all relevant Semiconductor Companies in Serbia, including RT-RK and MikroElektronika

Contact Us

Small Modular Reactors

There is strong interest in small and simpler units for generating electricity from nuclear power, and for process heat. Small Modular Reactors (SMRs) represent a broad suite of designs that

Contact Us

Integrated Micro-Electronics D.O.O. Nis (Serbia)

Integrated Micro-Electronics D.O.O. Nis is an enterprise located in Serbia, with the main office in Niska Banja. The enterprise operates in the Semiconductor and Other Electronic Component

Contact Us

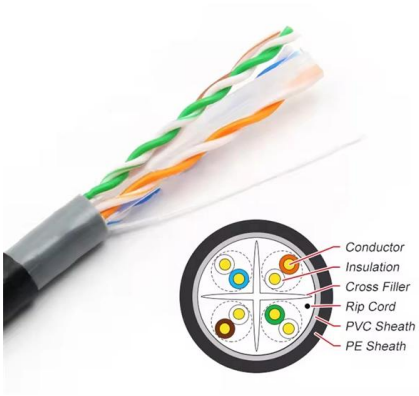

Top startups in Semiconductors in Serbia (Jan, 2026)

There are 28 Semiconductors startups in Serbia which include NovelIC Microsystems, Mikroe, Ucircuit, HDL Design House, SYRMIA. Out of

Contact Us

ICT in Serbia

The expensive (conventional) capital market in Serbia is still a typical transition country capital market, and certainly still presents a gener-al obstacle for Serbian companies in any sector.

Contact Us

Integrated Micro-Electronics d.o.o. Nis , IMI

By checking the box you consent to Integrated Micro-Electronics Inc. using your contact details to keep you informed by email about its other products, services

Contact Us

IMI to divest Czech manufacturing operations to Keboda

Philippines-based EMS provider Integrated Micro-Electronics Inc. (IMI) has signed a definitive agreement to divest its Czech Republic

Contact Us

Find Semiconductor and Other Electronic Component Manufacturing

Find detailed information on Semiconductor and Other Electronic Component Manufacturing companies in Serbia, including financial statements, sales and marketing contacts, top competitors, and

Contact Us

Mikroelektronika

MikroElektronika (known by its abbreviation MIKROE) is a Serbian manufacturer and retailer of hardware and software tools for developing embedded systems. The company headquarters is in

Contact Us

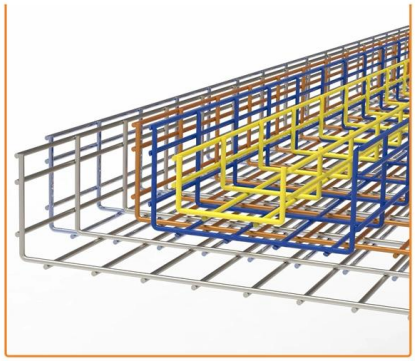

Top 9 Micro Camera Manufacturers

Have you ever wondered which micro camera manufacturers truly lead the industry? These top companies are known for innovation, making them

Contact Us

DigiKey , Electronic Parts and Components - Fast

DigiKey is your go-to source for millions of electronic components, many in-stock quantities, fast shipping, and expert support. From design to production, we get

Contact Us

Why Slovenia is a Top Hub for Solar Exports to MENA

Discover why Slovenia is an overlooked yet powerful hub for solar module manufacturing. Learn how its strategic location and trade access can

Contact Us

IMI Chip Factory, Niska banja, Serbia - Projektinzenjering

In expanding its presence on the growing gloabl market, it has recently opened its twentyfirst global factory in Nis. The factory consists of three parts: administration, production and sotrage.

Contact Us

IMI eröffnet Produktionsstätte in Serbien

Integrated Micro-Electronics, Inc. ('IMI'), philippinischer EMS-Dienstleister und Tochtergesellschaft der AC Industrial Technology Holdings, hat

Contact Us

Micron Technology , Global Leaders in Semiconductors

Explore Micron Technology, leading in semiconductors with a broad range of performance-enhancing memory and storage solutions

Contact Us

Time-saving embedded tools

Buy among 2000+ MIKROE original products: Compilers, Development boards, Add-on Boards, Programmers Debuggers and more

Contact Us

List of top Serbia Manufacturing Companies

Organizations in this hub have their headquarters located in Serbia, Europe; notable events and people located in Serbia are also included. This list of companies and startups in Serbia in the

Contact Us

Micron 20 Ltd

Micron-20 is the most popular PCB manufacturer in Bulgaria. Te company offers PCB design, production and SMT assembly. We offer high quality, low prices and short terms. RoHS printed circuit boards

Contact Us

Home

We represent electronic components manufacturers and distribute components in Serbia, Croatia, Slovenia, BiH, Montenegro and Macedonia. IGBT modules, power diodes, Schottky diodes,

Contact Us

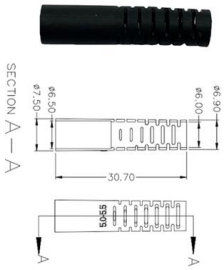

Serbia , IMI

Integrated Micro-Electronics, Inc. (IMI), the electronics manufacturing subsidiary of Ayala Corporation, is a leading global electronics manufacturing solutions expert specializing in highly reliable and quality

Contact Us

Integrated Micro-Electronics Inc.

Integrated Micro-Electronics Inc. 29,610 likes · 499 talking about this. We are IMI, your #GlobalElectronicsManufacturingSolutionsPartner #IMIat45 #

Contact Us

Contact Us

For datasheets, pricing, or custom fiber access solutions, please visit: https://www.frindel.es