FRINDEL OPTICS

Panama Outdoor Network Cabinet User Manual

Panama Outdoor Network Cabinet User Manual

IP65 Outdoor Network Cabinet Pole Mounted

Buy Now: Outdoor Network Cabinet Galvanized Steel Pole Mounted.The outdoor rack cabinet can be used in wireless communication.

Contact Us

Free PDF Manuals Online & User Guides

Manuals.plus gives you instant access to PDF user manuals, owner's manuals, quick-start guides, installation instructions, and troubleshooting help -- all in one

Contact Us

19T030A-215100-H

Step 7: Rotate the switch lock to secure the left and right panels together with the interrupt nally close the ring cap (D) NOTE: IT IS USER'S RESPONSIBILITY TO MAKE SURE ALL PARTS ARE

Contact Us

Outdoor Communication Cabinet Solutions , PDF

The document discusses outdoor cabinets used for telecommunications equipment. It provides background on the company and describes different types of outdoor cabinets for fixed network and

Contact Us

Why Outdoor Communication Cabinets Are Crucial for

Outdoor communication cabinets protect telecom equipment from weather and security threats, ensuring reliable, efficient, and scalable network

Contact Us

9U Outdoor Network Cabinet Enclosure

Secure your outdoor network equipment with the 9U Outdoor Network Cabinet from STURDX. Ideal for telecom or industrial applications.

Contact Us

16U Weatherproof Cabinet Enclosure

The 16U Outdoor Network Cabinet with AC Unit is a weatherproof, IP66-rated NEMA enclosure designed to protect sensitive network equipment.

Contact Us

GFW PANAMA ASSEMBLY INSTRUCTIONS MANUAL Pdf Download

Page 1 PANAMA - OTTOMAN STORAGE ASSEMBLY INSTRUCTIONS Thank you for purchasing the OTTOMAN STORAGE. Please read the instructions carefully to ensure safe operation of the product.

Contact Us

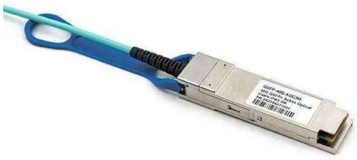

Amazon : Outdoor Network Cabinet

1-48 of 499 results for "outdoor network cabinet" Results Check each product page for other buying options.

Contact Us

Outdoor Server Racks & Outdoor Data Cabinets , IP Rated

4Cabling has a huge range of Outdoor Server Racks & Outdoor Data Cabinets for home & business applications. Outdoor racks & cabinets feature IP45 or IP65 rating & may be wall mount or

Contact Us

User Manual Combined outdoor telecom cabinet

So we have designed a brand new outdoor communication cabinet that can be combined more conveniently. The combination of outdoor communication cabinets has the following characteristics:

Contact Us

Outdoor Cabinets That Keep Your Equipment Safe Always

Discover the best outdoor communication cabinets designed to protect your equipment from harsh weather, dust, and impacts, ensuring durability and

Contact Us

26U Outdoor Network Cabinet

The 26U Outdoor Network Cabinet is a premium weatherproof and IP66 rated network enclosure designed to protect your valuable network devices and servers.

Contact Us

External Type Cabinets

External Type Cabinets offer durable, weather-resistant enclosures for safeguarding critical telecom and network equipment outdoors. Designed for security and efficient organization, these cabinets ensure

Contact Us

A comprehensive guide to telecom racks and cabinets

Learn more about the vital role of telecom racks and cabinets play in ensuring seamless connectivity and network efficiency.

Contact Us

Outdoor Network Cabinets - Floor Standing, Pole, Wall

Explore durable outdoor network cabinets with floor standing, pole, and wall mount options for secure installation of your network equipment.

Contact Us

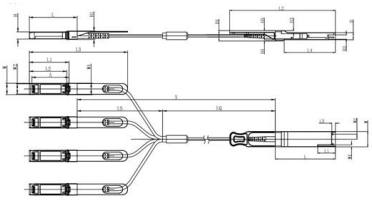

Unit mm

QSFP28	L	L1	L2	L3	L4	W	W1	W2	H	H1	H2	H3	H4	H5	H6
Max	72.2	-	128	4.35	61.4	18.45	-	6.2	8.6	12.4	5.35	2.5	1.6	2.0	-
Type	72.0	-	-	4.20	61.2	18.35	-	-	8.5	12.2	5.2	2.3	1.5	1.8	6.55
Min	68.8	16.5	124	4.05	61.0	18.25	2.2	5.8	8.4	12.0	5.05	2.1	1.3	1.6	-

SFP28	L	L1	L2	L3	W	W1	W2	H	H1	A
Max	57.6	47.7	44.55	119.9	13.8	14.0	12.3	8.7	10.3	45.25
Type	57.4	47.5	44.35	117.9	13.55	13.8	12.1	8.5	10.1	45
Min	57.2	47.3	44.15	115.9	13.3	13.6	11.9	8.4	9.9	44.65

Outdoor Telecom Cabinet Air Conditioner User Manual

This manual is designed to help you install and operate your air conditioner properly and safely. Introduction The Outdoor Telecom Cabinet Air Conditioner is

Contact Us

Living Spaces PANAMA II 23ET126-9038A Assembly Instruction

PANAMA II 23ET126-9038A outdoor furnishing pdf manual download. Also for: Panama ii 331021.

Contact Us

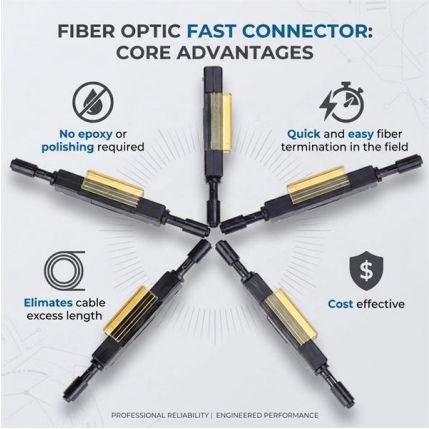

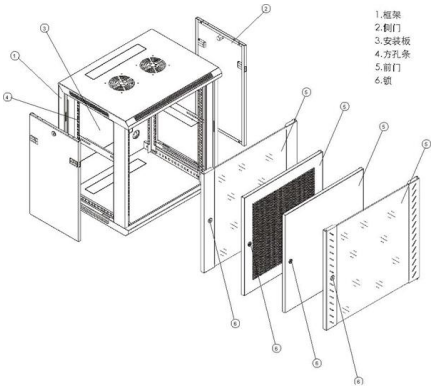

How to Properly Install and Set Up a Network Cabinet

Installing and setting up a network cabinet system correctly is essential for maintaining an efficient and organized network infrastructure. In this

Contact Us

The Importance of IP Rated (NEMA) Outdoor Network

To understand why IP rated (NEMA) outdoor network closets are important, just take a look at how they are used in different areas.

Contact Us

Panama Technical Manual

As soon as the cabinet has reached a storage temperature of below -18°C (as indicated by the controller display), it can be loaded with frozen foods up to the maximum of the load limit line.

Contact Us

Outdoor Telecom Cabinet with ac Manufacturer

All of our outdoor telecom cabinets are designed to shield your valuable network equipment from the elements, such as water and dust.

Contact Us

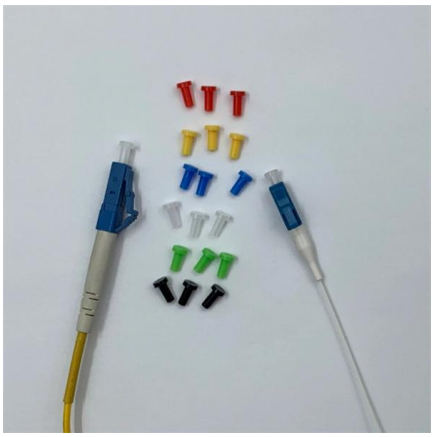

Panama outdoor communication battery cabinet specifications

A comprehensive guide to telecom battery cabinets provides essential information on their features, types, selection criteria, installation tips, and innovations in technology.

Contact Us

IP66 Rated Weatherproof Outdoor Network Cabinets

Discover IP rated (NEMA) outdoor network cabinets designed for superior protection and durability for your network infrastructure in harsh environments.

Contact Us

Outdoor Telecom Cabinet

Outdoor Telecom Cabinets are rugged enclosures designed to protect telecommunications equipment from environmental factors while providing secure

Contact Us

GFW PANAMA ASSEMBLY INSTRUCTIONS MANUAL

View and Download GFW PANAMA assembly instructions manual online. PANAMA indoor furnishing pdf manual download.

Contact Us

19T030A-215100-H

Tip- Remove protective wrapping and lay all parts on floor. Indentify all parts packed in Carton against attached parts list to make sure all parts are presented. Step 1: Install (B) on (A).as shown in

Contact Us

Living Spaces PANAMA II 23ET126-9038A Assembly Instruction

View and Download Living Spaces PANAMA II 23ET126-9038A assembly instruction online. OUTDOOR EXTENSION TABLE. PANAMA II 23ET126-9038A outdoor furnishing pdf manual download. Also for:

Contact Us

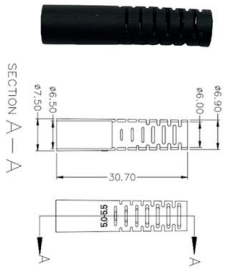

Contact Us

For datasheets, pricing, or custom fiber access solutions, please visit: https://www.frindel.es