FRINDEL OPTICS

How to use a gigabit fiber optic switch with 1 fiber optic cable and 4 electrical cables

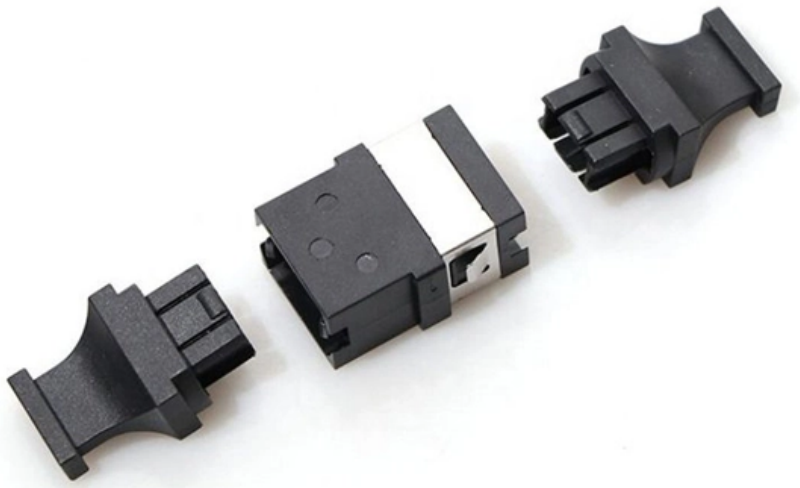

How to use a gigabit fiber optic switch with 1 fiber optic cable and 4

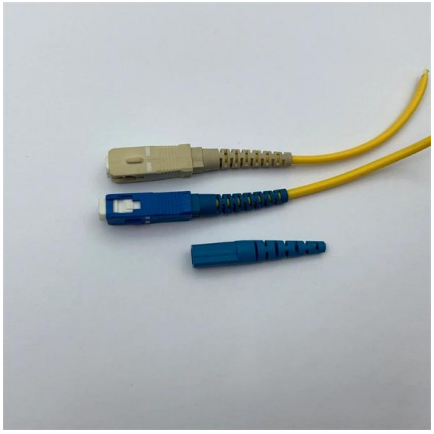

Connecting Network Switches via Fiber

Choose an SFP module based on the fiber optic cabling that will be connected to the network switches. SFP transceiver modules almost always require two fiber optic

Contact Us

Application Guide: Connecting Fiber-ready Network

Fiber optic cabling is increasingly used to connect network switches and other datacom equipment, especially in long-distance and mission-critical applications.

Contact Us

The ULTIMATE Guide to Fiber Optic Home Networking

Do you have a need to extend your home network around your property? Maybe you want reliable internet in the shed you turned into a work

Contact Us

New Cisco 9300 Switch with Fiber connection enable.

Switch model: For an all-fiber deployment, you'll want a Cisco Catalyst 9300 "Fiber" SKU, such as the C9300-48S-A or C9300-48S-E. These come with 48 x 1G SFP ports instead of copper

Contact Us

How to connect a new optic fibre to an ethernet switch

The objective is to run 1 or 2 additional optic fibre from the main switch down to the shed in the back of my garden and down to the garage as well. Here's a quick sketch to present the layout

Contact Us

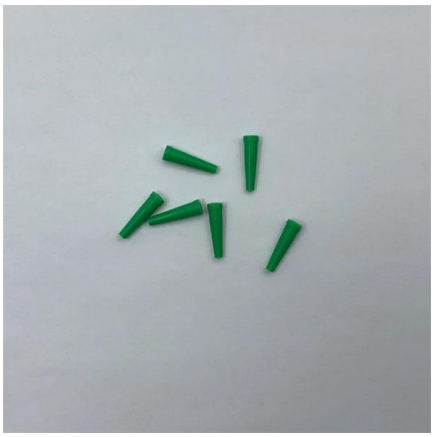

How Are Network Switch Connect To Fiber

Learn how network switches connect to fiber optics for fast and reliable data transmission. Understand the benefits and considerations of this

Contact Us

PCI Fiber Network Card Review: Why the SFP/SC Gigabit

A PCI fiber network card with SFP/SC port enables high-speed, low-latency fiber-optic connectivity, improving stability and performance in high-demand environments by reducing packet loss and

Contact Us

Installing 10 Gigabit SFP transcievers & fiber optic links between

This is a simple video showing how to install a 850nm fiber optic link using SFP transceivers between 2 10 Gigabit backbone switches. Covers transceiver installation, switch setup and link

Contact Us

Connect Multiple Switches with Fiber Optic Cables

In this video, we'll delve into the world of fiber optics, exploring the reasons behind their necessity, introducing Fiber Switches and Fiber PoE Switches, g

Contact Us

Build A 10G LAN with 2 Fiber Switches , Step-by-Step Guide

In this video, we'll guide you through building a high-speed 10G LAN by connecting two fiber switches. 0:00:00 Introduction to 10G LAN over Fiber Optic Cable 0:00:48 Introduction to 2.5G Network

Contact Us

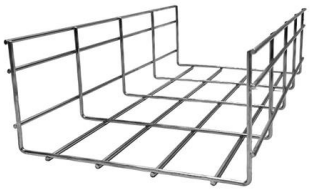

Optical networks

Wavelength division multiplexing is an optical networking technology designed to enable transmitting a greater amount of information over a single pair of fiber

Contact Us

Connecting Network Switches via Fiber

Terminate your fiber optic cabling with two LC-style connectors or purchase a pre-terminated fiber optic cable with two LC-style connectors. When connecting

Contact Us

How to configure the Gigabit Ethernet fiber-optic interface to support

Resolution The fiber interface has a fixed speed and does not support duplex options, but you can set the interface to negotiate link parameters (the default) or not to negotiate. For fiber

Contact Us

Online Bulk Cable Company , CableWholesale

Electrical Tools & Accessories USB-3.1 Cables & Accessories Copper/Fiber Network, USB, Mobile/Apple, HDMI & Home Theater Cables As a leading bulk cable company, CableWholesale is

Contact Us

How to Install Fiber Optic Cable: Step-by-Step Guide

Learn how to install fiber optic cable with Network Drops' easy step-by-step guide. Follow the process for quick and effective results.

Contact Us

Connect Multiple Switches with Fiber Optic Cables

In this video, we'll delve into the world of fiber optics, exploring the reasons behind their necessity, introducing Fiber Switches and Fiber PoE

Contact Us

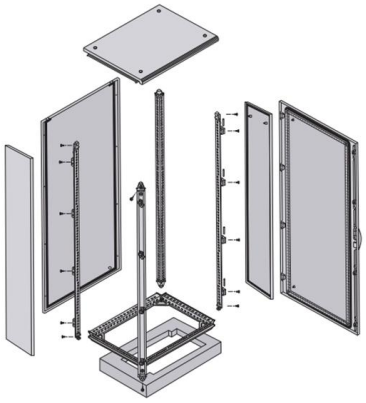

10 Gigabit Ethernet

A Foundry Networks router with 10 Gigabit Ethernet optical interfaces (XFP transceiver). The yellow cables are single-mode duplex fiber optic connections.

Contact Us

Why use 1Gbps fiber port over a 1Gbps Ethernet port?

I install an SFP 1 Gigabit interface transceiver on both switches. Since the switch is already 1 Gbps capable, what benefits do I gain by connecting both switches together via SFP using

Contact Us

Fiber Optic Network Card for PC: Real-World Performance

A fiber optic network card for PC offers superior speed and reliability over traditional copper setups, delivering real-world improvements in data transfer efficiency when installed correctly with suitable

Contact Us

Cables, Adapters, Fiber, Network Add-ons &

Tools , Computer Cable

Cables, Adapters, Fiber, Network Add-ons & Tools This 20m Multimode Duplex OM4 Fiber Optic Patch Cable (50/125) - LC to LC has ceramic ferrules and a 50/125 micron core, this cable is suitable for

Contact Us

Optic Modules Datasheet

Data Sheet datasheet is intended to guide the user through the various options available when choosing an optic module for a given platform depending on the architecture.

Contact Us

3BL

We've helped over 1,500 organizations build stronger communications and distribute their stories on credible publishers that drive reputation.

Contact Us

Best Routers For Fiber Optic Internet , Verizon Business

Find the best routers for fiber optic internet to maximize speed and security. Ensure seamless business connectivity with top-performing equipment. Explore options now!

Contact Us

How to connect a new optic fibre to an ethernet switch

Any other accessories required in the shed or the garage to connect to a new switch at the other end? (see bubble #2? and #3?) 2- How to physically connect the new fibre to the main

Contact Us

Multi-mode optical fiber

Multi-mode optical fiber is a type of optical fiber mostly used for communication over short distances, such as within a building or on a campus. Multi-mode links can

Contact Us

Fiber Optic Internet Installation Guide , Verizon Business

Follow our fiber optic internet installation guide for businesses and set up high-speed connectivity with ease. Ensure a smooth transition to fiber. Learn more now!

Contact Us

3 FAQs of Connecting Switches by Fiber Optical Ports

What are the main requirements of connecting switches by fiber optical ports? Under normal circumstances, two switches are required to meet the

Contact Us

Noob Question: Consumer Network Switch for fiber optics

I figured out that I need some sort of a "network switch" that could give each device 1GB even if all the devices are turned on and are sending and receiving traffic simultaneously.

Contact Us

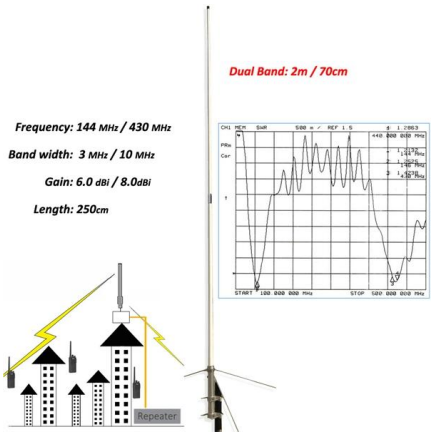

Contact Us

For datasheets, pricing, or custom fiber access solutions, please visit: https://www.frindel.es