FRINDEL OPTICS

Guatemala Server Rack Cold Aisle Explosion-Proof

Guatemala Server Rack Cold Aisle Explosion-Proof

Containment Aisle FAQs , Server Room Environments

Cold aisle containment is designed to eliminate hot spots in server racks, allows more space within the server rack to be used and reduce overall cooling cooling costs. Cold-aisle containment can be used

Contact Us

Aisle Containment for Server Rooms and Data Centers

Enhance cooling efficiency and reduce energy costs with aisle containment solutions from Server Racks Online. Designed for data centers and IT environments, our hot aisle and cold aisle containment

Contact Us

Server Room Containment Systems , Hot & Cold Dial Containment in

Hot and cold aisle containment is a proven strategy to optimize airflow, reduce energy costs, and improve cooling efficiency. At Profile IT Solutions, we specialize in designing and implementing

Contact Us

Effective Hot and Cold Aisle Containment for Modern

The layout of a containment system in your server room will depend on the way your system functions and there're a few ways the installation of a cold or

Contact Us

Aisle Containment Solution , 48U Server Rack Cabinet

Hot and cold air containment systems designed to maximize cooling predictability,

Contact Us

Cold Aisle Containment , Legrand

By isolating the cold aisle, containment reduces unintended mixing of cold supply air with hot exhaust air, maintaining uniform, predictable temperatures across all racks.

Contact Us

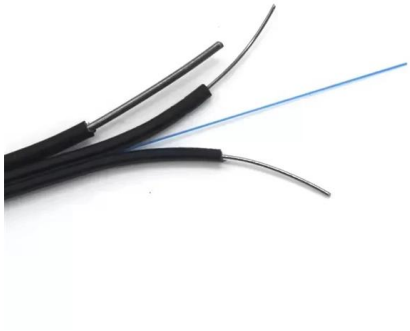

Hot and Cold Aisles , Data Center Aisle Containment

Hot and cold aisles are a specific type of server rack configuration that aim to control the temperature in data centers. Server racks are arranged in aisles with the front

Contact Us

Aisle Containment Systems for Hot & Cold Aisle Solutions

The goal of a hot or cold aisle configuration is to conserve energy

Contact Us

Modular Cold Aisle Containment w/ 45U Server Rack

AZE offers smart modular customizable hot and cold aisle containment solutions with 42U to 52U floor standing server rack enclosures. Save energy, reduce hotspots

Contact Us

Hot / Cold Aisle Containment , Soft Curtain

We offer the standard and customization aisle containment solutions that help to reduce the energy consumption by eliminating the mixing of hot and cold air in the data center ld aisle containment

Contact Us

What is hot/cold aisle in data centre

Hot/cold aisle is a layout design for server racks in a data center. The goal of it is to increase the effectiveness of cooling system by managing air flow

Contact Us

Gabinetes y Racks para Servidor Guatemala

Disponibles en diferentes tamaños y configuraciones para adaptarse a cualquier espacio y necesidad empresarial. Optimiza tu infraestructura de TI con nuestros gabinetes y racks para servidor en

Contact Us

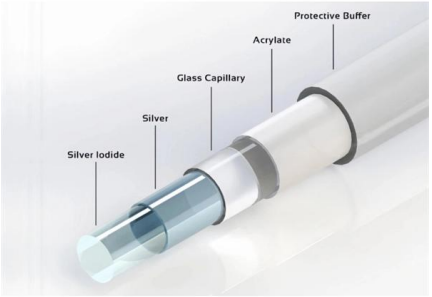

48U Server Rack Enclosure , Cold Aisle Containment , Data Center IT

The aisle containment system improves cooling efficiency in hot aisle/cold aisle rack configurations by essentially creating a room within the aisle and keeping hot and cold air separated to make existing

Contact Us

Cold Aisle Containment in Data Centers , Subzero

With cooling provided through a raised floor, this cold aisle containment project uses rigid wall panels in conjunction with the Polar Cap 2 roof system to provide

Contact Us

dataracks

Products Modular Security Cages Aisle Containment Racks & Cabinets Cabinet Accessories Wallboxes Retrofit Solutions Electromechanical Solutions

Contact Us

52U Server Rack Enclosure , Cold Aisle Containment , Data Center IT

The aisle containment system improves cooling efficiency in hot aisle/cold aisle rack configurations by essentially creating a room within the aisle and keeping hot and cold air separated to make existing

Contact Us

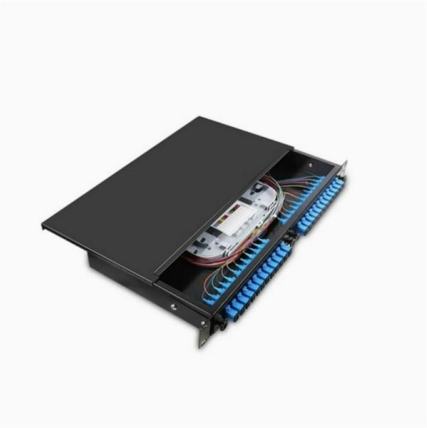

Hot Aisle vs. Cold Aisle Containment for Data Centers

Today's two main data containment systems are used in data centers: hot aisle containment and cold aisle containment. Hot or cold containment is a

Contact Us

Data center racks and aisle containment , Enoc System

Our flexible server racks and aisle containment solutions for hot and cold corridors are both cost and energy efficient. We help you to create a complete, future-proof

Contact Us

Cold Aisle Containment , Legrand

Cold aisle containment creates an enclosed corridor in front of server cabinets, ensuring that the coldest air goes directly into equipment intakes. By isolating the cold aisle, containment reduces unintended

Contact Us

Modular Cold Aisle Containment w/ 45U Server

AZE offers smart modular customizable hot and cold aisle containment solutions with 42U to 52U floor standing server rack enclosures. Save energy, reduce hotspots

Contact Us

Data Center Hot/Cold Aisle Containment Systems , Eaton

Keep your server rack aisles cool to prolong network equipment life and data center efficiency. Full scale aisle containment solutions. Modular kits for every edge-of

Contact Us

Data Center Products , Maysteel Industries

DAMAC racks, cabinets and aisle containment systems are highly customizable and designed to evolve as your needs grow. Explore data center solutions today!

Contact Us

Data Centre Cooling: Hot Aisle and Cold Aisle Design

Data Centre Cooling: Hot Aisle and Cold Aisle Design Data centres have become an integral part of today's technological landscape, used to store, process and

Contact Us

Explore hot and cold aisle containment for your data center

Hot and cold aisle containment can help you maintain the best air flow, temperature and humidity in the data center to keep servers running efficiently.

Contact Us

Products

Hot & Cold Aisle Containment AMCO's Hot and Cold Aisle Containment Systems prevent hot and cold air mixing by creating controlled airflow paths, improving

Contact Us

Top Methods for Efficient Server Rack Cooling

This guide of gbc engineers explores the fundamentals of server rack cooling, and innovative technologies shaping the future of cooling infrastructure.

Contact Us

Hot and Cold Aisle Containment System Server Rack

Hot and cold aisle containment system server rack by Private Mold offers private labeling, sliding doors, perforated doors, and static payload of 1080KG. Perfect

Contact Us

Aisle containment , Airflow management , Eaton

Eaton offers a wide range of partial and total containment solutions that can accommodate hot aisle containment, cold aisle containment and rack-based heat

Contact Us

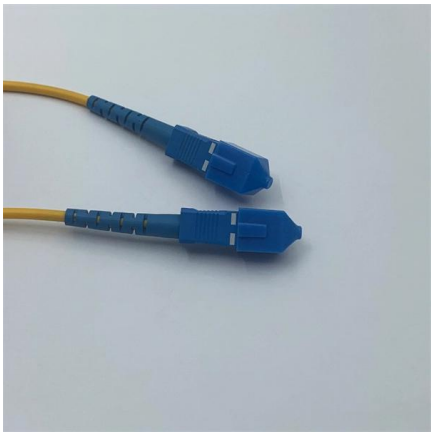

Aisle Containment for Server Rooms and Data Centers

Shop aisle containment solutions at Server Racks Online. Explore hot and cold aisle containment systems, including doors, panels, and ceilings. Improve data center airflow, cooling efficiency, and

Contact Us

Move to a Hot Aisle/Cold Aisle Layout

A Time-tested Technique The hot aisle /cold aisle data center layout was originated by IBM in 1992 and it is one of the oldest ways to save energy in the data center.

Contact Us

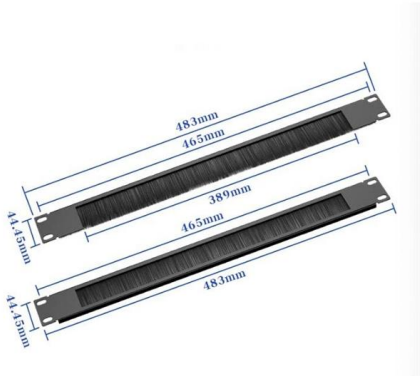

Contact Us

For datasheets, pricing, or custom fiber access solutions, please visit: https://www.frindel.es