FRINDEL OPTICS

# Double-layer small busbar terminals on the top of the central power cabinet

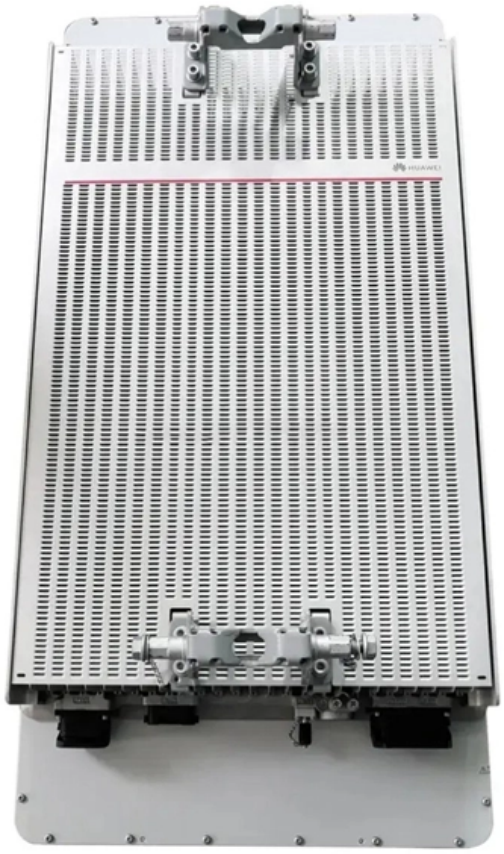

# Double-layer small busbar terminals on the top of the central power

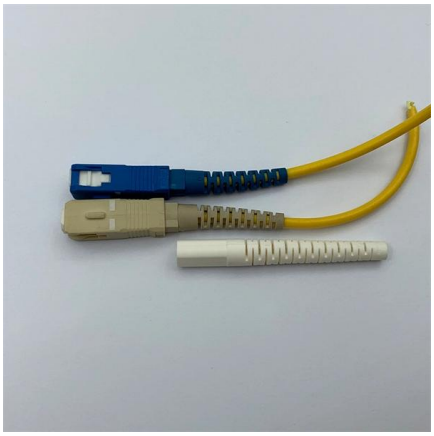

**A Laminated Busbar Design for Multiple IGBT Modules Paralleling**

Based on independent IGBT modules' paralleling, a laminated busbar is designed in this paper. It could improve the current sharing characteristics for various topologies such as half-bridge parallel, H

Contact Us

**Design Guide for bus bars , Mersen**

In determining the impedance of a power distribution system, these characteristics are significant in solving two of the most important problems for designers -

Contact Us

**High Power Multi-layer Molded Busbars: Design**

High Power Multi-layer Molded Busbars: Design Considerations and Construction Options Minimizing efficiency loss is key to success for next

Contact Us

**New Busbar Technologies Provide Flexibility for Expanding**

By enabling a compact, solderless and economical interface for connecting busbars to a variety of small PCBs, BusMateTM gives engineers a highly reliable and assembly-friendly solution for new power

Contact Us

**Understanding Electrical Ground Bus Bar: An Ultimate**

Explore everything you need to know about the electrical ground bus bar, a critical component for safe and efficient electrical systems.

Contact Us

**8US Busbar Systems**

8US busbar systems are used for mounting current-limiting devices (protective devices), such as fuse switch disconnectors, circuit breakers and complete load feeders, directly onto busbars. 8US busbar

Contact Us

**TE Connectivity**

Hier sollte eine Beschreibung angezeigt werden, diese Seite lässt dies jedoch nicht zu.

Contact Us

**Bus Bar : Different Types, Advantages & Disadvantages**

The single type is used in small substations where the process of the continuous power supply is not required. An additional type is used in large substations to

Contact Us

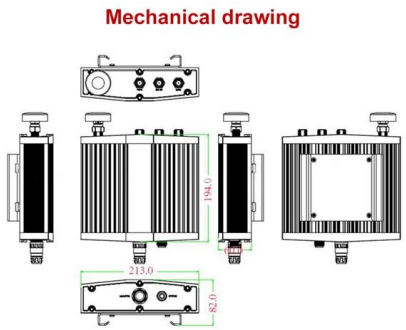


**Busbar systems**

RiLine busbar systems for individual switchgear and controlgear. Complete solutions up to 1600 A for AC or DC applications.

Contact Us

**Busbars 101: A Comprehensive Guide**

Introduction to Busbars in Electrical Systems Busbars are essential components in electrical power systems, designed to distribute power efficiently within switchgear, panel boards, and distribution

Contact Us

**LAMINATED BUS BAR SOLUTIONS**

Six electrolytic capacitors are easily connected to this edge-sealed, two-layer laminated bus bar providing a low inductance power path for a low horsepower, variable speed motor drive. Note the

Contact Us

**Busbar**

A busbar is defined as an electrically conductive strip or bar used to distribute power to multiple circuits in parallel. Busbar can also be used as a common tapping point for multiple ground or neutral terminals.

Contact Us

**(PDF) Busbar Design for High-Power SiC Converters**

This paper reviews the latest busbar design methodologies and offers design recommendations for both laminated and PCB-based busbars.

Contact Us

**Step-by-Step Busbar Installation Guide , Artizono**

Imagine transforming a chaotic web of electrical connections into a streamlined, efficient powerhouse. Busbars are the unsung heroes of electrical

Contact Us

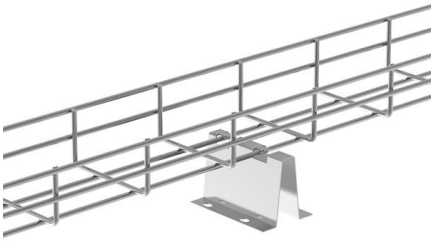

**IEC Busbar Mounting System Specifications Technical Data**

IEC Rating = 160 A Standard Busbar Adapters without electrical connections include two connection clips. They are intended to form bigger platforms; for example: for reversing starters, starters with

Contact Us

**Catalog Extract LV 10 · 10/2022**

Our busbar systems for electrical installations offer a particularly easy way of fitting distribution systems with electrotechnical components. The modular design saves space, while quick assembly contacts

Contact Us

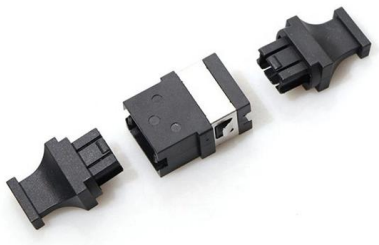

**Copper Busbar Jointing Methods**

Efficient joints in copper busbar conductors can be made very simply by bolting, clamping, riveting, soldering or welding. Bolting and clamping are

Contact Us

**Busbar**

In electric power distribution, a busbar (also bus bar) is a metallic strip or bar, typically housed inside switchgear, panel boards, and busway enclosures for

Contact Us

**LAMINATED BUS BAR SOLUTIONS**

An economical design that carries power from multiple power supplies onto the backplane within a Base Station Cabinet. Individually laminated and assembled together reducing a complex wiring scheme to

Contact Us

**POWER COMPONENT DESIGN SOLUTIONS**

BENEFITS Solutions customized to end applications enable smaller and faster DC-AC inverters that are robust and thermally efficient. High production volumes that meet stringent quality standards for

Contact Us

**Busbar**

Modular busbar systems for control panels consist of pre-engineered components designed to make power connections with common solid copper conductors. The system can be configured in varying

Contact Us

**Electrical busbar system**

Electrical busbar systems (sometimes simply referred to as busbar systems) are a modular approach to electrical wiring, where instead of a standard cable wiring to

Contact Us

**What is Electrical Busbar? Types, Advantages,**

Explore the world of electrical busbars - from types to advantages and disadvantages. Simplify power distribution with streamlined connections.

Contact Us

**High Power Multi-layer Molded Busbars: Design**

This Tech Bulletin provides an overview of how new complex multi-layer molded busbar technologies can deliver significantly improved electrical

Contact Us

**Understanding Electric Bus Bars: Functions, Types, and**

Explore the functions, types, and applications of electric bus bars while discussing their advantages, materials, and safety considerations.

Contact Us

## Contact Us

For datasheets, pricing, or custom fiber access solutions, please visit: https://www.frindel.es