FRINDEL OPTICS

Distribution Box Button Functions





Distribution Box Button Functions



Distribution Box: Key Functions, Components, and

Learn everything about the Distribution Box, its key components, and how to choose the right one. Explore our quality products and upgrade your

Contact Us

Power Distribution Boxes Explained Simply

Learn what a power distribution box is, how it works, key components, types, and why it's vital for safe and efficient electrical systems.

Contact Us





Understanding Distribution Boxes: Your Guide to Power

Understanding distribution boxes: Your guide to power distribution. Learn about power distribution box functions and shop power distribution options.

Contact Us

Comprehensive Understanding of Distribution Box

A distribution box helps manage electricity in homes or workplaces. It makes sure power flows safely and efficiently to devices. Let's look at its main jobs. Power distribution and circuit management The

Contact Us





What Is a Control Box? Functions, Types & Uses

Discover what a control box is, how it works, key components, types, and design tips for industrial, commercial, and residential use.

Contact Us

Distribution Boxes: Types and Functions

A distribution boxes acts as the load center and main distributor of electrical power within a building. Also called a distribution board, panel board,

Contact Us

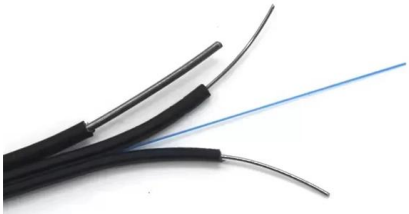

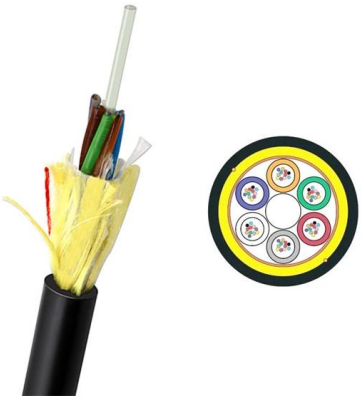

Power Distribution Boxes Explained Simply

Discover the essentials of a Power Distribution Box--how it works, key types, benefits, and tips to ensure safe, efficient electrical power management.

Contact Us

What is a Distribution Box? - A Comprehensive Guide

A distribution box organizes and controls power flow, ensuring safety and efficiency in electrical systems.

Contact Us





The Ultimate Guide to Distribution Box Types

Discover the key types of distribution boxes with NUOMAK's comprehensive guide. Learn about Main Distribution Boards (MDB), Consumer Units, Transfer

Contact Us

What Is an Electrical Distribution Box? A Complete Guide

Key Functions and Benefits The electrical distribution box serves a critical role in the safe distribution of power by centralizing circuit control and preventing overloads

Contact Us





What does a distribution box do?

Distribution box is a device for configuring, monitoring and protecting the power system. It is often placed in buildings, factories and even power

Contact Us

Distribution Boxes Explained: Types, Functions, and

Learn about distribution boxes, their types, functions, and safety features to ensure efficient and secure electrical power distribution in any building.

Contact Us

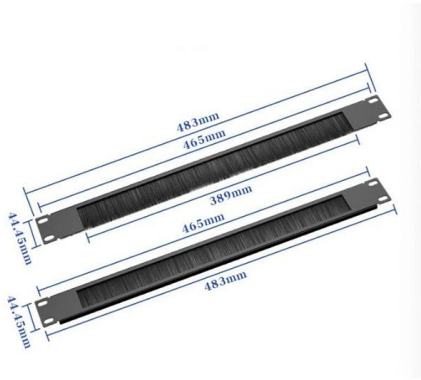



What is the Internal Structure of The Distribution Box

Learn about the internal structure of a distribution box, its components, functions, and key types. Understand its role in electrical systems

Contact Us

Power Distribution Box Essentials: Functions, Types

7) Considerations for choosing a power distribution box The context, security needs, and purpose all play a vital role in deciding a power distribution

Contact Us





Explore Power Distribution Box Types and Functions

Power distribution boxes are used in commercial and residential buildings and are part of the electrical system, also known as switchboards.

Contact Us

Distribution Box: Types and Functions , Axis-Electricals

Watch our video to understand the Types, Applications & Functions in Detail! They are generally used as a distribution box during a main upstream breaker. Line

Contact Us





The Importance of Distribution Boxes in Electrical Systems

Learn more about how distribution boxes play a critical role in the safe and efficient operation of electrical systems.

Contact Us

What is the function of a distribution box?

1. Centralized Control and Distribution The main function of a Distribution Box is to act as a central hub. The single, thick cable bringing power from the utility company enters this box. Inside,

Contact Us





Understanding Distribution Boxes: A Comprehensive Guide

A distribution box, also known as a power distribution box or electrical distribution box, is used to distribute electrical power safely to multiple

Contact Us

Distribution Boards

Distribution boards, often referred to as electrical panels or breaker boxes, serve as the nerve center of any electrical system. Here we explore the crucial parts of a distribution board and gain insights into

Contact Us

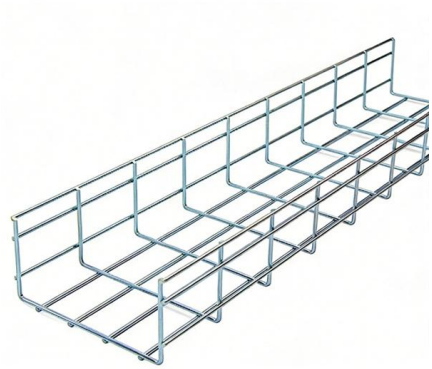



Distribution Box: Types and Functions , Axis-Electricals

A distribution box ensures that electrical supply is distributed in the building, also known as a distribution board, panel board, breaker panel, or

Contact Us

What is the function of a distribution box?

The main switch in the Distribution Box allows you to cut off power to the entire property at once. This is essential for maintenance, emergencies, or when you are away for an extended

Contact Us





Distribution Box Guide: Types, Components & Solutions

Understand distribution boxes (DB boxes) in 5 minutes. Learn about types, components, functions, and uses. Find the perfect DB box for your needs.

Contact Us

What is the Function of a Distribution Box in Electrical Systems

Understand the function of the distribution box in electrical systems and how it ensures safe and efficient power distribution.

Contact Us





Distribution Box: Comprehensive Guide on Types, Safety & Technology

Explore the essential functions, types, safety features, and technological advances of distribution boxes for efficient electrical power distribution.

Contact Us

What Is a Distribution Box?

What to Look for When Choosing a Distribution Box If you're going to buy a distribution box, there are several things you should look for. You should

Contact Us

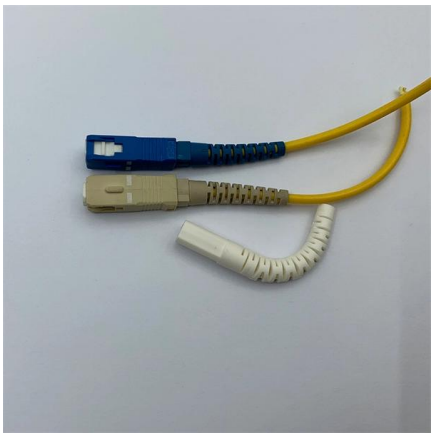

Contact Us

For datasheets, pricing, or custom fiber access solutions, please visit: https://www.frindel.es