FRINDEL OPTICS

Dimensions of Optical Cable Fastening Clamps

Dimensions of Optical Cable Fastening Clamps

Fibre Cable Clamp

Our range of nylon fibre cable clamps hold fibre optic cabling securely and safely in bespoke wiring clamps, preventing bending or movement that could damage the

Contact Us

Comprehensive Guide to Fiber Optic Cable Clamps

Select the appropriate clamp for the application: It is essential to choose the appropriate type and size of clamp based on the installation

Contact Us

Tensioning Clamps for Fiber Optic Cables

Anchoring, wedge-shaped tension clamp H3 models are suitable for self-supporting aerial or ADSS fiber optic cables, electric cables, and for "figure 8"-like cables with the external load-bearing element - for

Contact Us

FIBER CLAMP OFC-2012 , Cable clamps (reusable)

The foam pads can hold cables for temporary fixing and the arm part closes to fasten the cables firmly. The clamp can hold 12 cables of outer dia. 2mm or 3.2×2mm oval.

Contact Us

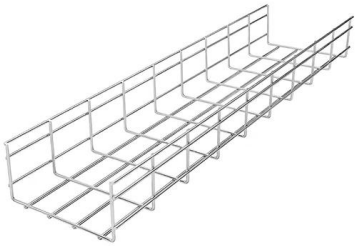

Anchoring tension clamp H20

Buy best-quality anchoring and wedge-shaped clamps for optical fiber cable suspension in construction of aerial fiber infrastructure. Anchoring, wedge-shaped

Contact Us

Fixing clamps

These clamps are used to fasten optical fibre aerial cable to the connecting sleeve in the mast of high-voltage overhead lines as a fastening fitting on the profiles of the tower construction. If only one fibre

Contact Us

Cable clamps

Cable clamps for coaxial, fiber optic and power cables. FIMO cable clamps are suitable for a quick, safe and secure installation on any kind of support.

Contact Us

Fiber Optic Cable Clamps for Secure Fixing

Fiber Optic Cable Clamps In 2015, Jera line started to produce clamps and brackets for FTTX fiber optic cable deployment. We spend a lot of time and cost for new products development and test to

Contact Us

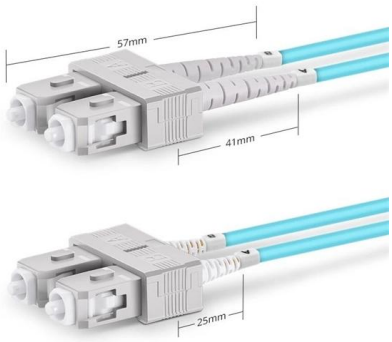

Duplex SC UPC

Fiber Optic Cable Clamp

Fiber optic tension clamp aim to keep the tensile state fiber fixed and secure. It is a reliable and sturdy solution for optical cable management.

Contact Us

Cable Clamps Selection Guide: Types, Features,

Cable clamps are accessories for wire and cable. They are used to bundle, clip, clamp, label, guide, and protect wires and cables. Clamps play an important role

Contact Us

How to Install an Anchor Tension Clamp for Fiber Optic Cable

Anchor tension clamp installation guide for drop cable systems. Easy step-by-step setup with secure fastening for FTTH and aerial fiber networks.

Contact Us

OMHF series optic fiber coupling clamps

Material: 6061T4 aluminum alloy The OMHF01L vertical coupling clamp is a left-handed clamp that is used symmetrically with the OMHF01R vertical coupling clamp. With an adjustable clamping angle

Contact Us

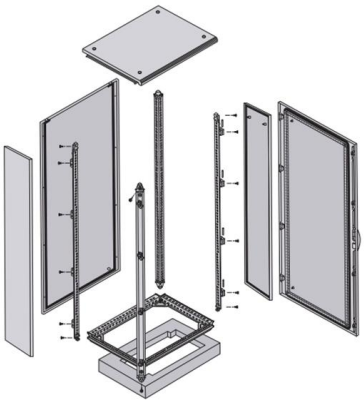

FIBER CLAMPS

Available in standard or high-temperature configurations, these clamps have options allowing them to mount to virtually any optical component. Adjustable clamping force and Viton fiber pads provide

Contact Us

Provide Various Fiber Cable Clamps-OMC FTTH

OMC's durable fiber cable clamp for organizing and protecting fiber optic cables. Easy installation ensures stable support in FTTH and telecom networks.

Contact Us

FASCLAMP Fiber Optic Cable Clamp

Keep cables secure and enclosures from moving around while preparing and splicing. Easy open clamp with bull nut that spins freely to tighten.

Contact Us

Tension clamps are the ideal assistant

when laying fiber

Fiber optic cable fittings are a universal set of devices designed for fixing wires on facades of buildings and supports, for connecting consumers, wiring lines,

Contact Us

YK Fiber Optic Drop Cable Clamp

YK Fiber Optic Drop Cable Clamp The universal bracket YK is made from galvanized steel by cold stamping production method. Also called FTTH hook (pole bracket

Contact Us

Fiber Optic Cable Installation and Handling Instructions

Introduction Fiber optic cables can be easily damaged if they are improperly handled or installed. It is imperative that certain procedures be followed in the handling of these cables to avoid damage

Contact Us

PUK-KAT KS EN

H cable clamp for fastening to C-profi les A06 HB cable clamp for fastening to profi le rails A09 HB-IW cable clamp with additional insulating vat A10 H-IW cable clamp with additional insulating vat A07 HK

Contact Us

Fiber Optic Tension Clamp

Gripping Mechanism: The clamp usually has a mechanism for gripping the fiber optic cable firmly. This can be a set of adjustable clamps or other secure fastening

Contact Us

Reliable Tension Clamp Solutions for Fiber Optic Cable

As fiber optic infrastructure expands across urban and rural environments, securing aerial fiber optic cables (ADSS / GYTS / GYXTW / figure

Contact Us

Provide Various Fiber Cable Clamps-OMC FTTH

During installation, appropriate fixtures should be selected based on the type and diameter of the optical cable, and it should be ensured that the fixtures do not

Contact Us

Electrical and Fiber Optic Cable Management

These cable management products offer a choice of methods to secure, route, label, and bundle electrical cables and fiber optic patch cables. Click the options in

Contact Us

Cable Clamps & Fastening Devices

Self-locking sRF fasteners are the optimal solution for an easy and quick fastening to various supports of: coaxial cables, wave guides and fiber optic cables. The cables are firmly secured, without dan-ger

Contact Us

Fiber Cable Clamp

Fiber Cable Clamp In 4G/5G networking, the telecommunication projects will use more and more combined cable clamps, which need to fix both power cables

Contact Us

Tension Clamp , FIBEYE

Tension Clamp Fiber Optic Tension Clamps: Secure and Reliable Cable Support Tension clamps are designed to provide secure and reliable support for fiber optic

Contact Us

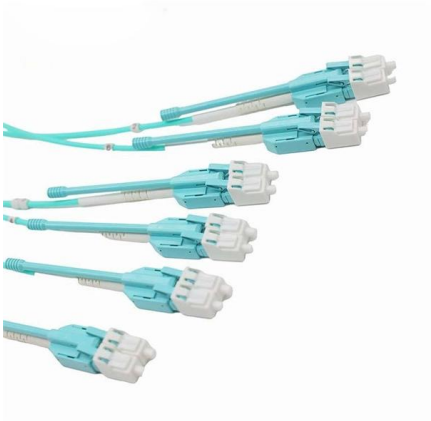

Cable Accessories , Corning

The Clamp is used for dead-ending of 4mm to 6mm aerial round cables in FTTH architectures where spans should not exceed 70m (by 10 concatenated spans)

Contact Us

Fiber Cable Clamps & Grounding Kits

Cable Attachment Kit for fiber optic panel with cable gland Specifications Add to My Products Lists 700025513 , 12A1 CLAMP

Contact Us

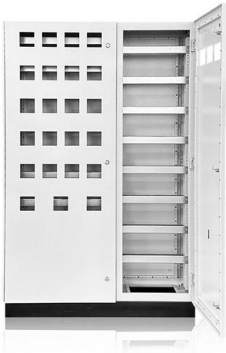

Downlead Clamps for OPGW and ADSS FIBER OPTIC CABLE

Downlead Clamps for OPGW and ADSS AFL Downlead Clamps are used to guide Optical Ground Wire from the top of the structure to the splice box. AFL's Downlead Clamps install easily and provide

Contact Us

Contact Us

For datasheets, pricing, or custom fiber access solutions, please visit: https://www.frindel.es