FRINDEL OPTICS

Croatia Outdoor Integrated Power Supply Remote Monitoring Solution

Croatia Outdoor Integrated Power Supply Remote Monitoring Soluti

Outdoor Integrated Power Supply

The low latency, large bandwidth, and multiple access features of the 5G network have resulted in dense sites, increased energy consumption, and increased costs.Tian-Power has specially developed a 5G

Contact Us

(PDF) Determining Optimal Solar Power Plant Locations

The study identifies optimal solar power plant locations in Croatia using GIS and multi-criteria decision-making methods. Key parameters influencing site suitability

Contact Us

Brand New Outdoor Power Supply Solutions in Split, Croatia

Summary: Split, Croatia's coastal gem, is witnessing a surge in demand for reliable outdoor power solutions. This article explores how advanced energy storage systems cater to tourists, outdoor

Contact Us

(PDF) Integration of power quality monitoring system in Croatian

Research and implementation projects around Europe do not propose a solution where existing infrastructure is optimally used for this purpose. Presented paper gives a original solution for fulfilling

Contact Us

Proposal of an External Remote Sensing Circuitry for Switching-Mode

Multiple parameters were monitored in order to assess the power supply performance to which the proposed remote voltage-sensing circuitry is attached.

Contact Us

(PDF) Integration of power quality monitoring system in

AI-generated Abstract This paper discusses the integration of a power quality monitoring system within the Croatian distribution system, mandated by

Contact Us

Top 15 Condition Monitoring Companies in Croatia (2026) , ensun

Supracontrol specializes in environmental monitoring solutions, offering real-time condition monitoring through their mobile app, which allows users to track various metrics at remote locations.

Contact Us

Innovative Integrated Solution for Monitoring and

The solution of monitoring and protection presented are composed of a hardware-software structure with Global System for Mobile Communications

Contact Us

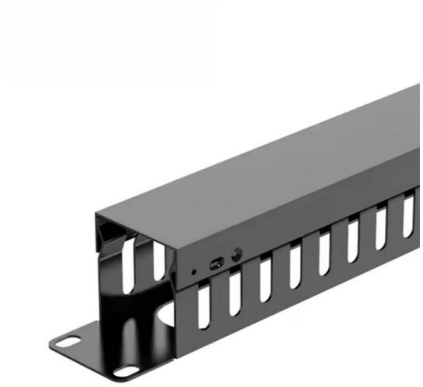

Hybrid 48VDC power supply project

Robust solution for powering telecommunication equipment at 48VDC! The system is equipped with remote monitoring via a GSM/LTE router, which enables

Contact Us

EPC48 , Outdoor Power System

Integrating power supply system, environment monitoring system, temperature control system and backup power system, It has the advantage of high-reliability, high-efficiency, high-flexibility, safe and

Contact Us

Outdoor Integrated Power Supply

The working conversion efficiency is as high as 97.5%, supports external expansion of power supply capacity, and independent power-off function of DC shunt.

Contact Us

Uninterruptible power supply systems

(UPS) , KONCAR

This approach is strengthened by microprocessor-based systems, which provide both local and remote monitoring and control. Communication with our service

Contact Us

Solar Powered Camera in Split, Croatia: A Sustainable Security Solution

Solar-powered cameras are transforming how Croatia's coastal gem manages security and environmental monitoring. This guide explores why these systems are ideal for Split's Mediterranean

Contact Us

EPC48 , Outdoor Power System

E series outdoor power system is an integrated power supply solution for centralized outdoor base station power management. Integrating power supply system, environment monitoring system,

Contact Us

Uninterruptible power supply systems (UPS) , KONCAR

DC uninterruptible power systems are indispensable in modern power facilities, providing the highest level of operational reliability. Unlike AC UPS systems that

Contact Us

Outdoor off-grid power/HMI solution

Whether you're delivering environmental data, public announcements, or tourism info--our screen + charger combo is perfect for outdoor smart city solutions. Add

Contact Us

VIDEO, SECURITY & BEYOND

enges make it difficult. Additionally, users are eager for a fast, flexible security solution with easy setup and removal in many temporary applications su h as construction sites. Hikvision's integrated Solar

Contact Us

Activities , GreenSwitch

The GreenSwitch project will invest in primary infrastructure to modernise and digitalise the distribution and transmission energy systems in Austria, Croatia and Slovenia.

Contact Us

Remote Energy Monitoring with IoT - Benefits for the

Remote Energy Monitoring with IoT - Are they Essential for Smart Environments? Cutting-edge technology like the Internet of Things (IoT) has made life a lot

Contact Us

Axis Communications

In temporary or remote sites where you don t have access to a fixed network, deployable surveillance ensures you don t compromise on security. Our leading

Contact Us

Zagreb RV Inverters

Track system status in real-time, receive instant fault alerts, and control your inverter remotely through our mobile app - monitor your RV's power system from your Zagreb home or while exploring Croatia,

Contact Us

KPA Unicon to supply biomass CHP plant to Grubisno

Using woody biomass, the plant will supply electricity to the national power grid and heat to the nearby wood processing plant. Kari Liukko, Energy

Contact Us

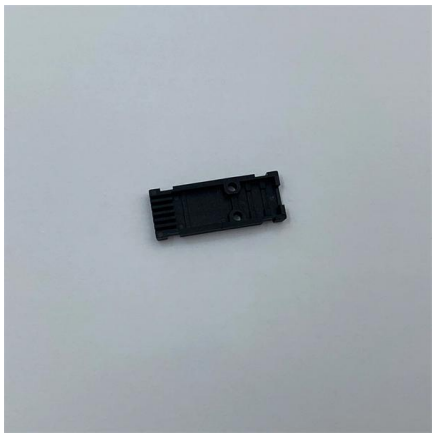

Advanced Remote Area Power Supply Solutions: Reliable,

Discover innovative power supply solutions for remote locations featuring advanced energy management, hybrid power integration, and modular scalability. Ensure reliable, sustainable power

Contact Us

Unattended Intelligent Monitoring Project for Outdoor Power

I. Project Background To address the industry pain points of scattered distribution, difficult inspection, hard early warning of hidden dangers, and untraceable faults of outdoor power

Contact Us

Croatia's Strong Outdoor Power Supply Solutions: Reliable Energy for

Final Thought: In Croatia's demanding outdoors, your power supply shouldn't be the weakest link. Whether you're running an island hotel complex or maintaining remote telecom infrastructure, the

Contact Us

Top 13 Remote Monitoring Companies in Croatia (2026) , ensun

Our 24/7 live CCTV monitoring service leverages a team of trained professionals and AI-powered analytics to remotely observe your property in real time. We don't just record; we act.

Contact Us

KPA Unicon to supply power plant to Grubisno Polje in

Energostatik and KPA Unicon have signed a contract on the supply of Unicon Altius 5 MWe biomass power plant to Grubisno Polje in Croatia.

Contact Us

Remote Monitoring Solution for Cathodic Protection Systems , PSS

Discover advanced data transmission solutions for cathodic protection systems. Ensure reliable operation, real-time control, and maintenance efficiency.

Contact Us

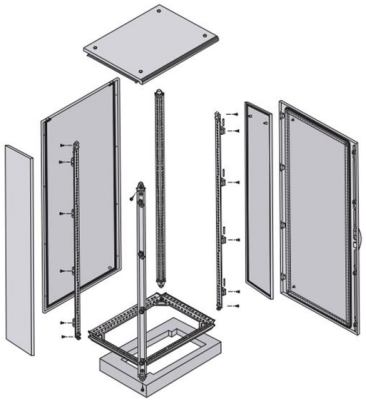

Telecom Energy Solution

Telecom Energy Solution Huawei has integrated information and interconnection technologies with power electronics to create the Smart Site Solution -- a

Contact Us

Contact Us

For datasheets, pricing, or custom fiber access solutions, please visit: https://www.frindel.es