FRINDEL OPTICS

Columbia Server Rack-Mounted

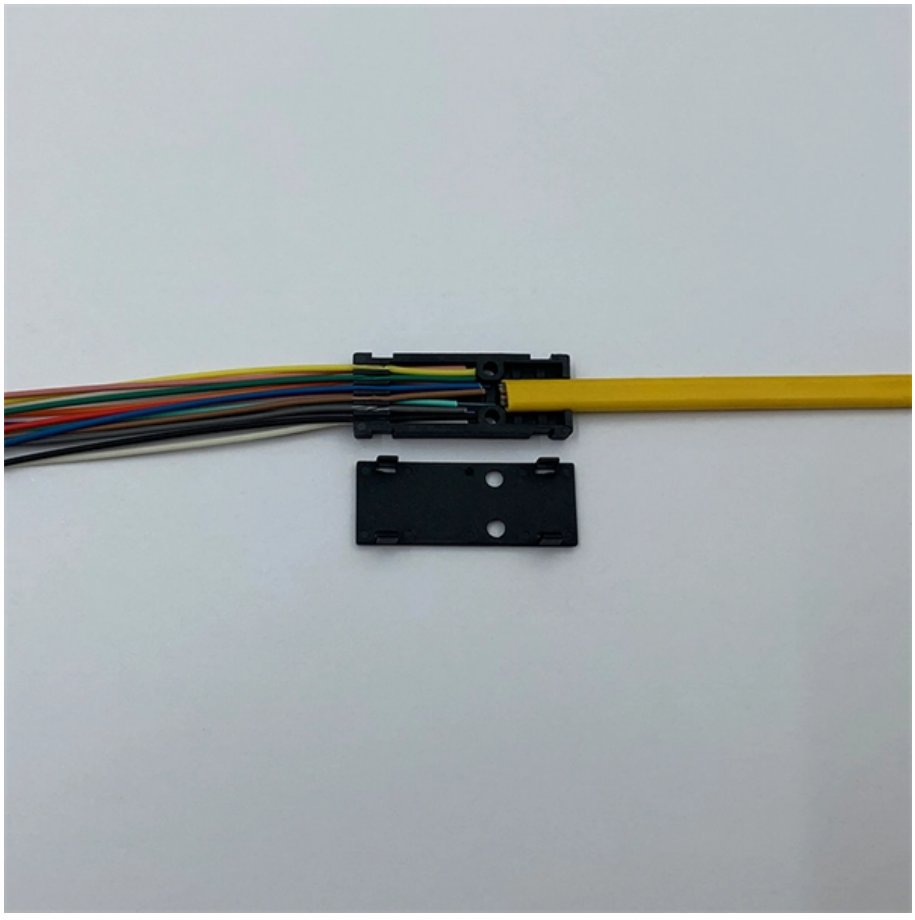



Columbia Server Rack-Mounted



What is Rack Server (Rack-Mounted Server)? Definition

A rack server (rack-mounted server) is a compact, powerful computer designed to fit into a standardized rack enclosure. By stacking multiple servers in

Contact Us

Colocation and Server Hosting , Columbia University Department of

Department of Systems Biology Information Technology (DSBIT) hosts servers for members of the Columbia University research community. Pricing depends on the number of racks of servers that a

Contact Us





4U Rackmount For EATX/ATX Motherboard For Rackmount Server

4U Rackmount For EATX/ATX Motherboard For Rackmount Server Configurations. - Supports EATX/ATX motherboard Supports up to eight SATA3 or SAS3 hot-swap HDD Supports 80plus 1U

Contact Us

Rackmount Servers

All Broadberry rack servers are designed from the highest quality, enterprise-grade components for the level of reliability customers like Google, NASA and CERN expect from us. Our diverse product

Contact Us





Network Server Racks for sale in Columbus, Ohio

New and used Network Server Racks for sale in Columbus, Ohio on Facebook Marketplace. Find great deals and sell your items for free.

Contact Us

Rackmount Servers , 1U, 2U, 3U, 4U Rack Mount Servers in 19"

SuperLogics builds industrial rackmount servers to your custom specification! Configure 19'' Rackmount servers offered in 1U, 2U, 3U, 4U & 5U rack mount server cases. Shop and customize your

Contact Us





Cisco UCS C-Series Rack Servers

Rack server products in the Cisco UCS C-Series family deliver Cisco Unified Computing, reduce total cost of ownership, and increase business agility.

Contact Us

Server Rack Buying Guide: Wall-Mounted, Floor

In today's digital landscape, the server rack is the backbone of IT infrastructure for small offices, enterprise data centers, and industrial

Contact Us



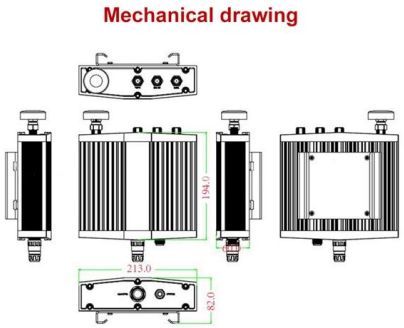

Rack Mounted Servers: The Ultimate Guide to Choosing

Rack mounted servers are a type of server hardware that is designed to be installed in a rack, also known as a cabinet, in a data center or server room.

Contact Us

Rack Mount Servers Explained

Visit our website to explore our wide range of Rack Mount Servers! Get detailed information about the standard measurements, mounting hardware, and the basics!

Contact Us





Rackmount Servers

Pogo rack mount servers utilize a vast array of the finest current technologies and platforms. We offer all the popular form factors, complying with popular server rack sizes such as 1u server rack, 2u server

Contact Us

Rack Servers , HP® Official Store

Free Shipping. Buy direct from HP. See customer reviews and comparisons for Rack Servers. Upgrades and savings on select products.

Contact Us





COLUMBUS KIT-2037 Rpa Rack Mount Slide

Overall, the Kit-2037 Columbus 1U RPA 20 Rack Mount Slide Kit is a high-quality and reliable solution for organizing and managing your server racks. Its durable construction, smooth-rolling slides, and

Contact Us

Used Server Racks for sale

Secure your equipment with top-notch server racks like the 16U Cabinet and Dell PowerEdge 42U. Find the perfect rack on eBay today!

Contact Us





Wall Mount Rack for Servers and Network Equipment

Shop our wide selection of wall mount racks for servers and network equipment. 4 post rack, enclosed, and open frame options available. Order Now, Ships Today!

Contact Us

Network Server Racks for sale in Columbia, Maryland

New and used Network Server Racks for sale in Columbia, Maryland on Facebook Marketplace. Find great deals and sell your items for free.

Contact Us





Rackmount Servers

Designed to fit seamlessly into standard 19-inch racks, these servers are engineered for environments where space efficiency and organized cable management are essential.

Contact Us

Rack Servers , Custom-built rackmount servers AMD & Intel, GPU

Configure your rackmount server today using our online server configurator. Coltec stock a massive range of Supermicro, HPE, Gigabyte and custom servers with the latest AMD and Intel processors.

Contact Us





Network Server Racks for sale in Columbia, South Carolina

New and used Network Server Racks for sale in Columbia, South Carolina on Facebook Marketplace. Find great deals and sell your items for free.

Contact Us

Rack Servers

Looking for rack servers that offer top performance and power efficiency? Look no further than our offerings here from top brands like Dell, HP and Lenovo. Shop now.

Contact Us





Techrack Server Racks. All Sizes Wall-Mounted And Wire Racks

Large Server Enclosure Racks: 23U - 44U (48"-84" H) TechRack provides top of the line server rack enclosure cabinets for any data center environment, large or small. Cabinets are compatible with 19"

Contact Us

Server

Rack Mount Servers Rack mount servers are enterprise-grade systems designed to be installed in standardized server racks. They deliver high performance, scalability and efficient space usage for

Contact Us



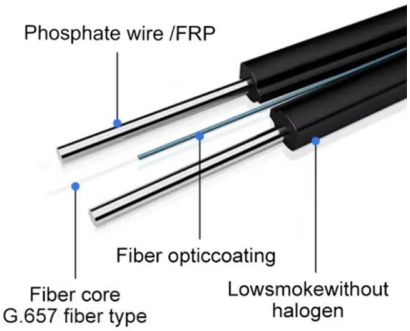

Dell EMC PowerEdge Rack Servers

Dell EMC PowerEdge rack servers help you build a modern infrastructure that minimizes IT challenges and drives business success. Choose from a complete portfolio of 1, 2, and 4-socket rack servers to

Contact Us

Dell PowerEdge R750xs 2U Rack Server , ServerMonkey

The Dell PowerEdge R750xs is a performance-optimized 2U rack server designed for scalable, general-purpose workloads. This configuration includes 12x 3.5" hot-swap drive bays, supporting high

Contact Us

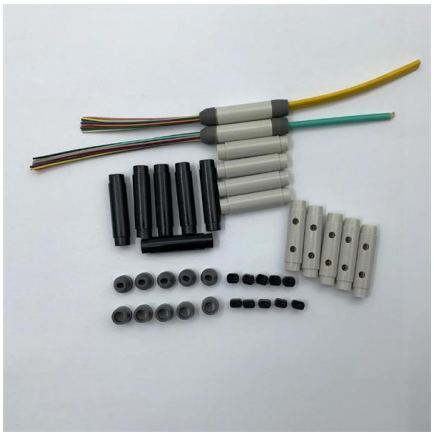



Rackmount Units

Rackmount units are essential components for optimizing space and performance in data centers and IT environments. Designed to fit neatly into standard server racks, these units provide a streamlined

Contact Us

Rackmount Servers , Supermicro eStore

Rackmount Superior Performance, Efficieny and Time-to-Market for Rapid Adoption Industries Broadest Range of Rackmount Data Center Servers Optimized for

Contact Us



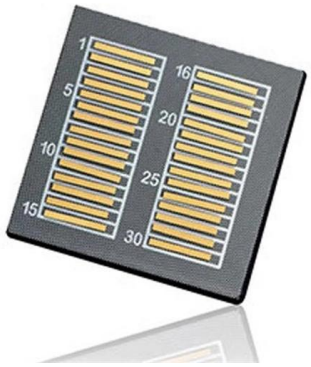

MU Rugged Rackmount Servers

Rackmount servers are computers housed in a rectangular enclosure designed to be mounted within a standard server rack. Their space-saving design allows multiple

Contact Us

Server Racks , Server Management , StarTech Colombia (en)

Colombia (en) - StarTech Server Racks offer durable construction that ensures a stable platform for valuable network and server equipment. Our wide range of server racks includes unique wallmount

Contact Us





Rackmount Servers , 1U, 2U, 3U, 4U Rack Mount Servers in 19"

We offer various pre-configured motherboard rackmount servers in 1U, 2U, 3U, 4U, 5U rackmount server cases. Our rackmount servers are populated with the industry's most trusted component

Contact Us

Contact Us

For datasheets, pricing, or custom fiber access solutions, please visit: https://www.frindel.es