FRINDEL OPTICS

All photovoltaic inverters are connected to the distribution box

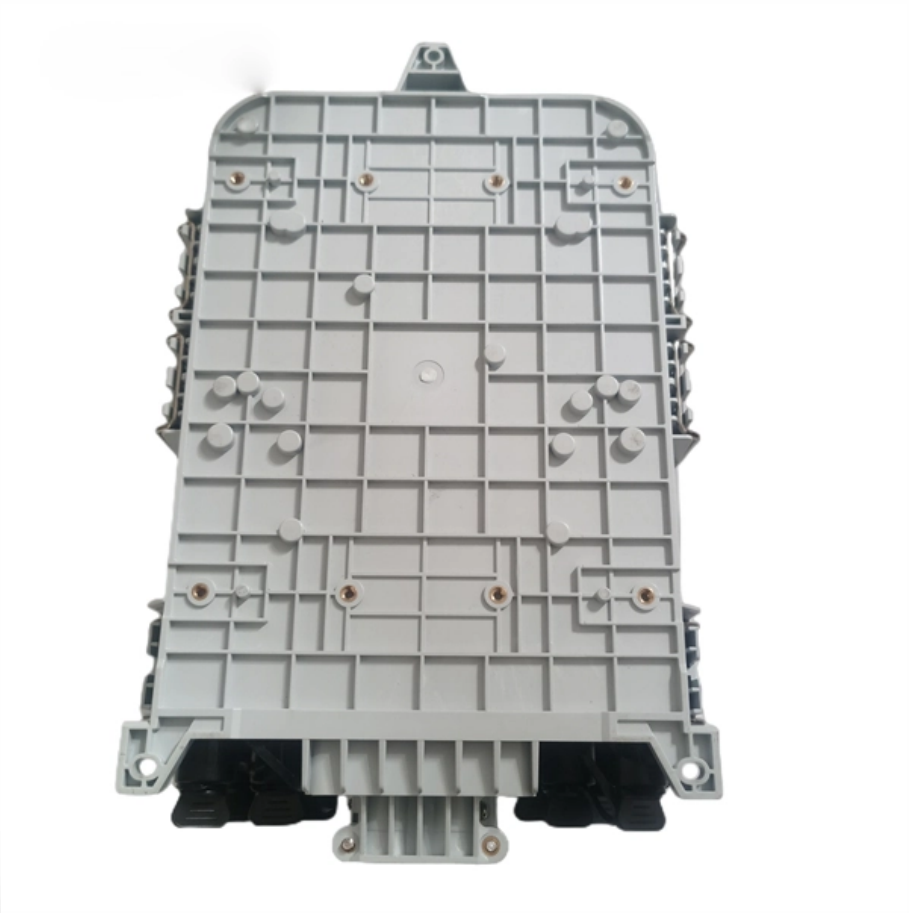

All photovoltaic inverters are connected to the distribution box

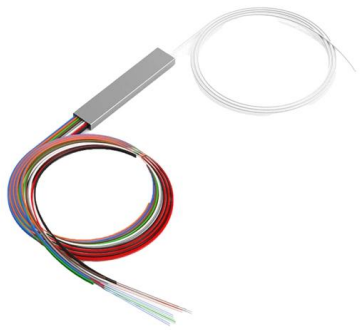

Photovoltaic inverter connected to distribution box

1 Introduction. Photovoltaic (PV) power generation, as a clean, renewable energy, has been in the stage of rapid development and large-scale application [1 - 4].Grid-connected inverter is the key component

Contact Us

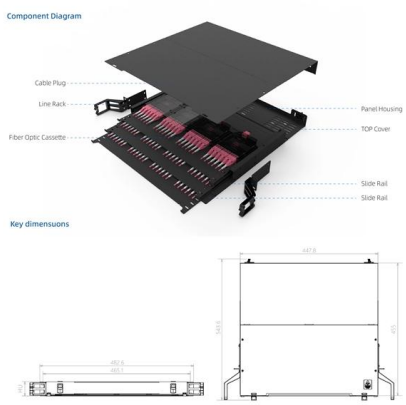

String combiners for solar photovoltaic systems

Unmatched protection and control In a photovoltaic system the modules are arranged in strings and fields depending on the type of inverter used, the total power and the technical characteristics of the

Contact Us

Photovoltaic AC combiner box detailed explanation

The photovoltaic AC combiner box is used in a photovoltaic power generation system with string inverters and is installed between the AC output side of the inverter

Contact Us

What is a Solar Combiner Box?_Solar Insider_Hoymiles

A solar panel combiner box combines the outputs of all your inverters, or your strings. These feed into the box, turning the electricity into a single circuit. Out of that box comes a single

Contact Us

PV Inverters

PV Inverters - Basic Facts for Planning PV Systems The inverter is the heart of every PV plant The inverter is the heart of every PV plant; it converts direct current of the PV modules into grid-compliant

Contact Us

AC Distribution Box (ACDB) , Key Role in Solar Power

What the AC Distribution Box Does in Solar Power Systems In solar setups, the AC Distribution Box has a special job. Solar panels turn sunlight into

Contact Us

Understanding the Importance and Operations of PV

Combiner boxes are vital in photovoltaic power generation, gathering and disbursing direct current (DC) generated from multiple photovoltaic panels to

Contact Us

Connecting Inverter to Distribution Box: Essential Safety

In this article, you will find information about connecting inverter to distribution box: essential safety tips, step-by-step guidance, and common mistakes that often

Contact Us

Solar Combiner Boxes, Isolators & Disconnects Guide

Proper wiring ensures solar system safety. This guide covers the roles of combiner boxes, isolators, and disconnect switches in managing power and

Contact Us

How to Connect Solar Panels to a Combiner Box: A

Step 4: Connect the Output to the Inverter Combine the outputs: The positive and negative outputs from the combiner box will be connected to the

Contact Us

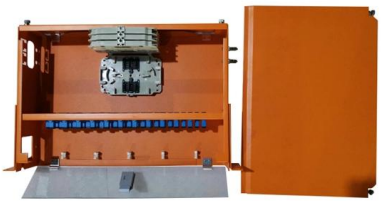

The Many Boxes of Solar

This article will serve as a guide to the most commonly used ones. In the image below, we see the PV array feeding into first a junction box, then a combiner box,

Contact Us

What is a Combiner Box as Used in PV System: A

A combiner box in a PV system connects multiple solar panel strings, streamlining wiring, improving safety, and sending DC power to the inverter.

Contact Us

The Ultimate Guide to Solar Combiner Boxes: From Basics to

Solar combiner boxes are essential components in solar photovoltaic (PV) systems, designed to consolidate the outputs of multiple solar panel strings into a single output for connection

Contact Us

Step-by-Step Guide: Wiring Your PV Combiner Box

A pv combiner box wiring diagram is a useful tool for understanding how to properly connect multiple photovoltaic panels in a solar power system.

Contact Us

What is a Combiner Box as Used in PV Systems? Complete Guide 2025

A combiner box represents specialized electrical enclosure consolidating multiple photovoltaic source circuits (strings) into single output circuit before routing power to inverters.

Contact Us

Solar Photovoltaic (PV) System Components

For example, a 4000 watt inverter can be connected to a 12 volt battery and used for energizing small AC appliances. A string inverter is used to convert DC power from a solar array to AC power and can

Contact Us

Solar Combiner Box: Complete DC & PV Guide (2026)

A solar combiner box -- also called a PV combiner box, DC combiner box, or photovoltaic combiner box -- is a weatherproof electrical enclosure

Contact Us

Step-by-Step Guide to Connecting an Inverter to a

Connecting an inverter to a distribution board (DB) is a crucial step in ensuring uninterrupted power during outages. The process begins with turning off

Contact Us

What Is PV Combiner Box?Function And Application In Solar

PV combiner box is a crucial component used to simplify wiring connections and ensure safety when managing multiple PV strings simultaneously. It collects the energy produced by multiple PV strings

Contact Us

Grid-connected photovoltaic inverters: Grid codes, topologies and

This paper provides a thorough examination of all most aspects concerning photovoltaic power plant grid connection, from grid codes to inverter topologies and control. The reader is guided

Contact Us

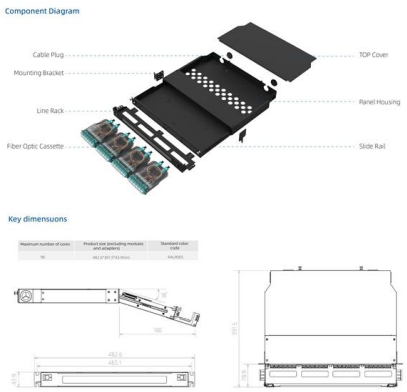

Parallel Inverter Operation & Phase Sync Guide , Anern

This guide covers parallel inverter operation, phase synchronization, and load sharing requirements for stable and redundant off-grid power systems.

Contact Us

How to Connect Inverters in Parallel: A Comprehensive

Connecting inverters in parallel allows you to increase your power output and enhance system reliability. This setup is especially beneficial for solar

Contact Us

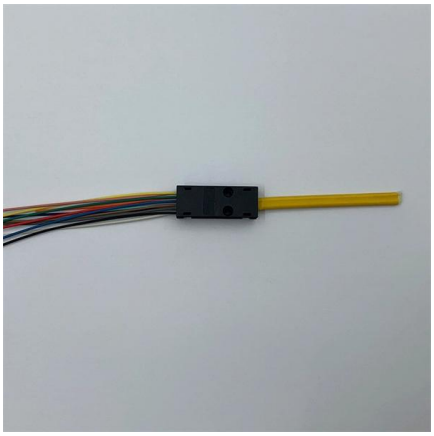

APPLICATION NOTE DC COMBINER BOX IN PHOTOVOLTAIC

External DC combiner boxes are used with central inverters in large-scale solar farms to consolidate thousands of strings and with single-mppt string inverters which can be managed as

Contact Us

A Comprehensive Guide to Combiner Boxes

in

Combiner boxes play an important role in photovoltaic (PV) installations. This comprehensive guide aims to shed light on the importance, functions, types and

Contact Us

APPLICATION NOTE DC COMBINER BOX IN PHOTOVOLTAIC

DC-PV2: It is a classification for electrical equipment used in photovoltaic (PV) systems, specifically for connecting and disconnecting PV circuits where significant overcurrents may occur

Contact Us

What You Need to Know About PV Combiner Boxes

To effectively gather and transmit this current to the inverter, you would install a PV combiner box. Usually mounted near the solar panel array or

Contact Us

Solar Combiner Box Wiring Diagram

Learn about solar combiner box wiring diagrams, essential components, installation procedures, and common wiring configurations for

Contact Us

Contact Us

For datasheets, pricing, or custom fiber access solutions, please visit:
https://www.frindel.es