FRINDEL OPTICS

48-port Fiber Fusion Tray Fiber Fusion Tutorial

48-port Fiber Fusion Tray Fiber Fusion Tutorial

Single Fusion splice tray accommodates 48 fibers

Single Fusion splice tray accommodates 48 fibers Get In Touch 269 Mavis Drive Pleasanton, CA 94566 Phone: 510-319-9878 Fax: 510-319-9876 Email:

Contact Us

How to Splice Fiber Optic Patch Panel 48 Core

Through this video you will love optical fiber work. To further enhance this learning process, we've created a video based of fiber optic splicing tutorial that will help you learn that. 1.

Contact Us

Splice Tray, HD, Fusion, 48-Fiber, Clear Transparent, 7''

The 48-Fiber transparent fusion splice tray is ideal for fusion splicing single fiber.

Contact Us

2178 Splice Closure Accessories 2543-D 48 F Single

Designed to fit in the 2178 closure family with ribbon cables in mind, the 2543-D splice trays offer a deeper tray which allows ease of routing for ribbon cables with

Contact Us

Opticom Trays, Drawers and Preloaded Trays

Trays, drawers and pre-loaded trays shall be constructed of steel material. Drawers shall have built-in bend radius control clips. Trays and drawers shall have removable top cover to provide easy access

Contact Us

How to Place a Fusion Splice in a Coyote Box , Fiber Optic Splice

In this step-by-step tutorial, we show you exactly how to place a fusion splice safely and securely inside a Coyote fiber optic splice enclosure.

Contact Us

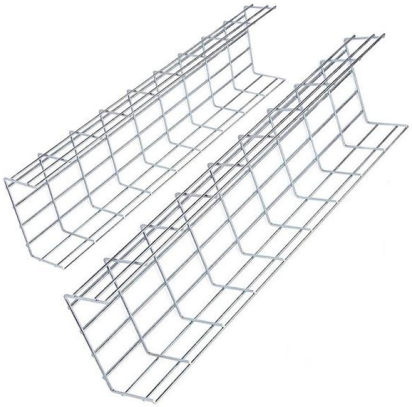

Unloaded 48 Port Fibre LIU Drawer Type , Fibre LIU

DIGISOL LIU 1U drawer type is a Fiber Rack Mount which has an enhanced engineering design and aesthetically superior, made of specially

Contact Us

FHD® Fiber Optic Splice Tray 24 Fusion For Rack

The fiber optical splice tray can hold and protect up to 24 fusion splices within FHD® series rack mount fiber enclosures. It is ideal for splicing OS1, OS2, OM1, OM2

Contact Us

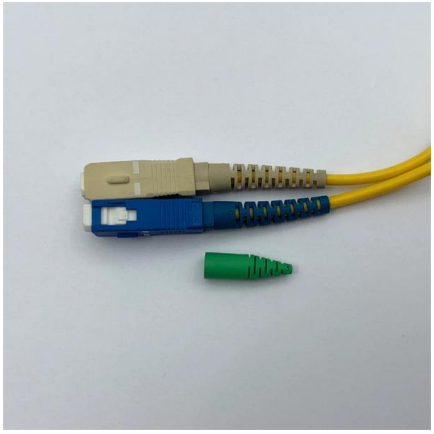

Fusion Splice Tray 48 Cores

How the Fusion Splice Tray 48 cores actually works? The incoming cable is brought into the splicing center where the outside jacket of the cable is stripped away.

Contact Us

Splice Tray, HD, Fusion, 48-Fiber, Clear Transparent, 7''

The 48-Fiber transparent fusion splice tray is ideal for fusion splicing single fiber. The see through cover and mylar insert enable easy viewing when visual fault locator (VFL) testing and verification is

Contact Us

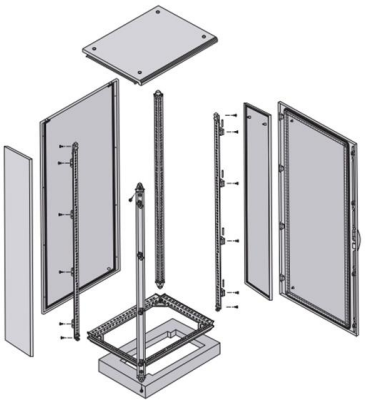

Fiber Cable Mechanical Splicing Guide Using Fiber

Learn how to perform mechanical fiber cable splicing inside fiber enclosures using fiber splice trays. This step-by-step guide covers fiber

Contact Us

1U Sliding Type 48 Core ODF Fiber Optic

Patch Panel

This 1U sliding type rack mount terminal box is a high quality fiber optic patch panel. With 48 core and 24 port design, it offers efficient optical signal transmission.

Contact Us

Ficha_AR-SC4P-48F-M

SPLICE CLOSURE PORTS MECHANICAL FUSION AR-SC4P-48F-M 1 de 3 DESCRIPTION AR-SC4P-48F-M is a small dome type fiber optic splice closure that used for fiber optic splicing and protection.

Contact Us

24 Fiber, Aluminum Fusion Splice Tray

These fusion splice trays are fully compliant to industry specification TelecordiaTM GR-769, Splice Organizer Assemblies for Optical Fibers.

Contact Us

OPTICAL FIBER CONNECTION TRAY

BF 48 E Plastic handles closing system (The tray offers strength so that the draw does not open easily) Up to 4 inputs / outputs for fiber hose. Max diameter 23mm Fusion splice tray Labels for each port

Contact Us

12 Fiber Fusion Splice Tray

A fusion splice tray can hold up to 12 splices & possibly allow splice trays to be stacked together for use with higher strand number fiber optic cables.

Contact Us

Fusion Fiber Splicing Solutions , Leviton Network Solution

Fusion fiber optic splicing provides a permanent fusion connection between fibers and offers a lower insertion loss versus mechanical splicing. The fusion fiber

Contact Us

Fiber Optic Splice Trays & Termination Boxes: Fusion Splicing

LANshack offers fiber optic splicing solutions for your business with splice trays, termination boxes, and fusion splicing accessories.

Contact Us

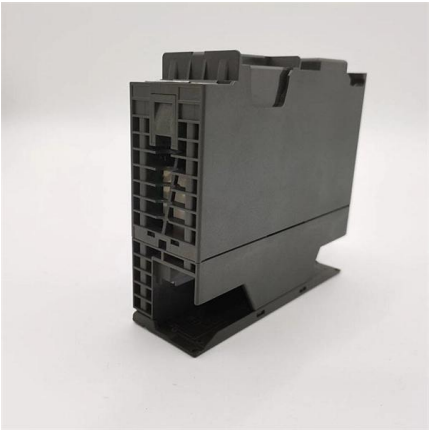

24 Fiber, Fusion Splice Tray

A fusion splice tray can hold up to 24 splices & possibly allow splice trays to be stacked together for use with higher strand number fiber optic cables.

Contact Us

How to Splice Fiber Optic Patch Panel 48 Core

Through this video you will love optical fiber work. To further enhance this learning process, we've created a video based of fiber optic splicing tutorial that will help you learn that.

Contact Us

How to do a fusion splicing in a fiber optics splice tray

Beyondtech's Splice trays are used to protect and hold fiber optic splices and store extra fiber in rack mount housings. Termination boxes keep

Contact Us

Panduit FST48 HD Fusion Splice Tray Kit

The fiber splice tray kit is for up to 48 discrete fiber fusion splices. It fits in Panduit FRMHSS-4RU and FRMHSST-4RU 4RU Splice Enclosures and FWMHSS-S-3456 and FWMHSS-S-6912 Wall Mount

Contact Us

Wide Tray 48 Single Fusion Splices , PSC20548 , Hubbell

Wide Tray 48 Single Fusion Splices Metal Splice Trays include a durable formed aluminum tray base.

Contact Us

Corning 80611486749 2178 Series Fiber

Optic Splice Closure, 3-Port

Shop 2178 Series Fiber Optic Splice Closure, 3-Port (Butt), Max. Single Fusion Splice Capacity: 48, External Ground, Tray By Corning (80611486749) At Graybar, Your Trusted Resource For Fiber

Contact Us

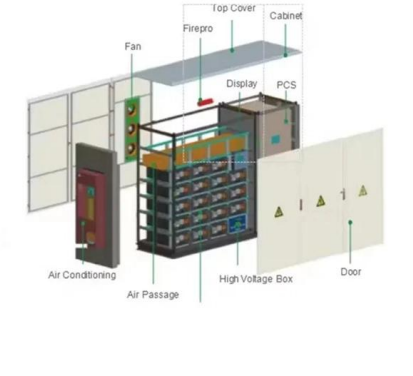

Fiber Splice Trays & Wallets

Discover CommScope fiber splice trays, fiber optic splice trays, and a convenient fiber splice organizer. Organize fiber connections with ease.

Contact Us

FiberExpress Ultra Fusion Tray PX104915 Installation Guide

1. Securing fibers to the tray 1.1 Attach 900um Distribution sub-units to the tray with provided cable tie . Do not over tighten. 1.2 Attach Flextube to the tray with provided cable tie. Do not

Contact Us

2178 Splice Closure Accessories , Corning

Designed to fit in the 2178 closure family with ribbon cables in mind, the 2543-D splice trays offer a deeper tray which allows ease of routing for ribbon cables with

Contact Us

2178 Splice Closure Accessories 2543-D 48 F Single

Designed to fit in the 2178 closure family with ribbon cables in mind, the 2543-D

Contact Us

Fiber Splice Trays - tagged "48-splices" - Fiber Savvy

Fiber Optic Splice Trays not only provide a protective space, they also provide organization for fusion splices. Plastic or Aluminum Fiber Splice Trays? The Fiber Splice Tray, 12 Single Fusion Splices,

Contact Us

Fiber Fusion Splice Tray DataSheet , FS

Fiber Fusion Splice Tray Fiber optic splice trays are designed to provide a location to store and to protect the fiber cables and the splices. Each tray provides space for mounting fiber splice protectors

Contact Us

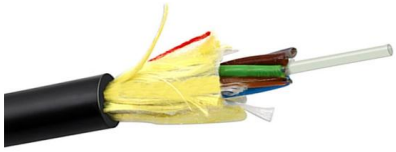

Contact Us

For datasheets, pricing, or custom fiber access solutions, please visit: https://www.frindel.es